MODEL: 30BRC4

Air-Fryer+Rotisserie Convection Microwave Oven

USER MANUAL

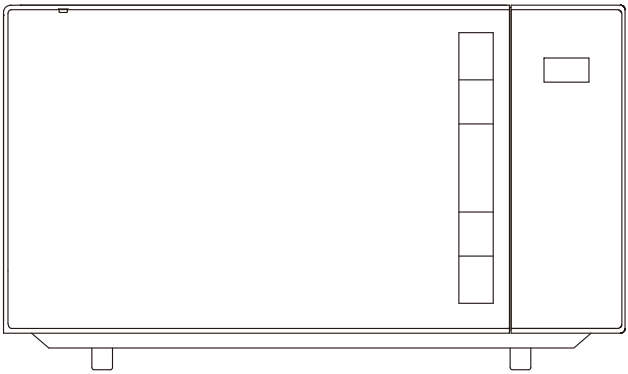

PLEASE READ THESE OWNERS'S MANUAL INSTRUCTIONS CAREFULLY BEFORE OPERATION AND KEEP IT FOR FUTURE REFERENCE.

Please record the details of your Microwave Oven below for future reference:

Serial no. _____

Purchase Date _____

Warranty _____

Customer Copy _____

CONTENT

CONTENT 1
PRECAUTIONS TO AVOID POSSIBLE EXPOSURE TO EXCESSIVE MICROWAVE ENERGY 2
IMPORTANT SAFETY INSTRUCTIONS 2
INSTALLATION GUIDE 5
GROUNDING INSTRUCTIONS 5
RADIO INTERFERENCE 6
BEFORE CALLING FOR SERVICE 6
COOKING TECHNIQUES 7
COOKING UTENSILS GUIDE 7
SPECIFICATIONS 8
PRODUCT DIAGRAM 8
CONTROL PANEL 9
OPERATION INSTRUCTIONS 11
- SETTING THE CLOCK 11
- SETTING THE TIMER 11
- MICROWAVE COOKING 12
- EXPRESS COOKING 12
- GRILL 12
- MICROWAVE+GRILL 12
- TURN GRILL 13
- MICROWAVE+TURN GRILL 13
- CONVECTION 13
- MICROWAVE+CONVECTION 14
- CONVECTION+TURN GRILL 14
- CONVECTION+MICROWAVE+TURN GRILL 15
- WEIGHT DEFROST 15
- AIR FRY 15
- AUTO COOK 55
- KEEP WARM 55
- FERMENTATION 55
- STEAM CLEAN 56
- DEODORIZATION 56
- DISINFECTION 56
- POWER SAVE 56
- CHILD LOCK 56
- PROTECTION 56
- BUTTON ADHESION PROTECTION 57
- COOLING FAETURE 57

CLEANING AND CARE 61

PRECAUTIONS TO AVOID POSSIBLE EXPOSURE TO EXCESSIVE MICROWAVE ENERGY

1. Do not attempt to operate this oven with the door open since open-door operation can result in harmful exposure to microwave energy. It is important not to defeat or tamper with the safety interlocks.
2. Do not place any object between the oven front face and the door or allow soil or cleaner residue to accumulate on sealing surfaces.
3. Do not operate the oven if it is damaged. It is very important that the oven door close properly and that there is no damage to the
   a) Door (including any bent),
   b) Hinges and latches (broken or loosened),
   c) Door seals and sealing surfaces.
4. The oven should not be adjusted or repaired by anyone except qualified service personnel.

IMPORTANT SAFETY INSTRUCTIONS

When using electrical appliance basic safety precautions should be followed, including the following:

WARNING!--To reduce the risk of burns, electric shock, fire, injury to persons or exposure to excessive microwave energy:

1. Read all instructions before using the appliance and keep for future reference.
2. Use this appliance only for its intended use as described in the manual. Do not use corrosive chemicals or vapors in this appliance. This type of oven is specifically designed to heat, cook or dry food. It is not designed for industrial or laboratory use.
3. Do not operate the oven when empty.
4. Do not operate this appliance if it has a damaged cord or plug, if it is not working properly, or if it has been damaged or dropped. If the supply cord is damaged, it must be replaced by the manufacturer or its service agent or a similarly qualified person in order to avoid a hazard.
5. **WARNING!**--Only allow children to use the oven without supervision when adequate instructions have been given so that the child is able to use the oven in a safe way and understands the hazards of improper use.

6. **WARNING!**--When the appliance is operated in the combination mode, children should only use the oven under adult supervision due to the temperatures generated
7. To reduce the risk of fire in the oven cavity:
   - When heating food in plastic or paper container, keep an eye on the oven due to the possibility of ignition.
   - Remove wire twist-ties from paper or plastic bags before placing bag in oven.
   - If smoke is observed, switch off or unplug the appliance and keep the door closed in order to stifle any flames.
   - Do not use the cavity for storage purposes. Do not leave paper products, cooking utensils, or food in the cavity when not in use.
   - The microwave oven is intended for heating food and beverages. Drying of clothing and heating of warming pads, slippers, sponges, damp cloth and similar may lead to risk of injury, ignition or fire.
8. **WARNING!**--Liquid or other food must not be heated in sealed containers since they are liable to explode.
9. Microwave heating of beverage can result in delayed eruptive boiling, therefore care has to be taken when handle the container.
10. Do not fry food in the oven. Hot oil can damage oven parts and utensils and even result in skin burns.
11. Eggs in their shell and whole hard-boiled eggs should not be heated in microwave ovens since they may explode even after microwave heating has ended.
12. Pierce foods with heavy skins such as potatoes, whole squashes, apples and chestnuts before cooking.
13. The contents of feeding bottles and baby jars should be stirred or shaken and the temperature should be checked before serving in order to avoid burns.
14. Cooking utensils may become hot because of heat transferred from the heated food. Potholders may be needed to handle the utensil.
15. Utensils should be checked to ensure that they are suitable for use in microwave oven.
16. **WARNING!**--It is hazardous for anyone other than a trained person to carry out any service or repair operation which involves the removal of any cover which gives protection against exposure to microwave energy.
17. This Microwave complies with EN 55011/CISPR 11, in this standard it belong to Class B Group 2 classification. Group 2 equipment: group 2 contains all ISM RF equipment in which radio-frequency energy in the frequency range 9 kHz to 400 GHz is intentionally generated and used or only used locally, in the form of electromagnetic radiation, inductive and/or capacitive coupling, for the treatment of

material, for inspection/analysis purposes, or for transfer of electromagnetic energy. Class B equipment is equipment suitable for use in locations in residential environments and in establishments directly connected to a low voltage power supply network which supplies buildings used for domestic purposes.

18. This appliance is not intended for use by persons (including children) with reduced physical, sensory or mental capabilities, or lack of experience and knowledge, unless they have been given supervision or instruction concerning use of the appliance by a person responsible for their safety.
19. Children should be supervised to ensure that they do not play with the appliance.
20. The microwave oven is only used in freestanding.
21. **WARNING!**--Do not install oven over a range cook top or other heat-producing appliance. if installed could be damaged and the warranty would be avoid .
22. The microwave oven must not be placed in the cabinet.
23. The door or the outer surface may get hot when the appliance is operating.
24. **WARNING!**--Accessible parts may become hot during use. Young children should be kept away.
25. During use the appliances becomes hot. Care should be taken to avoid pressing heating elements inside the oven, for cooking ranged and ovens.
26. The temperature of accessible surfaces may be high when the appliance is operating.
27. Appliance is not to be used by children or persons with reduced physical, sensory or mental capabilities, or lack of experience and knowledge, unless they have been given supervision or instruction.
28. **WARNING!**--If the door or door seals are damaged, the oven must not be operated until it has been repaired by a competent person.
29. The appliances are not intended to be operated by means of an external timer or separate remote-control system.
30. The microwave oven is for household use only and not for commercial use.
31. Never remove the distance holder in the back or on the sides, as it ensures a minimum distance from the wall for air circulation.
32. Please secure the turntable before you move the appliance to avoid damages.
33. **CAUTION!**--It is dangerous to repair or maintain the appliance by no other than a specialist because under these circumstances the cover have to be removed which assures protection against microwave radiation. This applies to changing the power cord or the lighting as well. Send the appliance in these cases to our service centre.
34. The microwave oven is intended for defrosting, cooking and steaming of food only.
35. Use gloves if you remove any heated food.
36. Caution! Steam will escape, when opening lids or wrapping foil.

37. This appliance can be used by children aged from 8 years and above and persons with reduced physical, sensory or mental capabilities or lack of experience and knowledge if they have been given supervision or instruction concerning use of the appliance in a safe way and understand the hazards involved. Children shall not play with the appliance. Cleaning and user maintenance shall not be made by children unless they are aged from 8 years and above and supervised.
38. If smoke is emitted, switch off or unplug the appliance and keep the door closed in order to stifle any flames.

INSTALLATION GUIDE

1. Make sure that all the packing materials are removed from the inside of the door.
2. **WARNING!**--Check the oven for any damage, such as misaligned or bent door, damaged door seals and sealing surface, broken or loose door hinges and latches and dents inside the cavity or on the door. If there is any damage, do not operate the oven and contact qualified service personnel.
3. This microwave oven must be placed on a flat, stable surface to hold its weight and the heaviest food likely to be cooked in the oven.
4. Do not place the oven where heat, moisture, or high humidity are generated, or near combustible materials.
5. For correct operation, the oven must have sufficient airflow. Allow minimum 20cm of free space necessary above the top surface of the oven and 5cm at both sides. The microwave oven rear plate must be placed close to the wall. Do not cover or block any openings on the appliance. Do not remove feet.
6. Do not operate the oven without glass tray, roller support, and shaft in their proper positions.
7. Make sure that the power supply cord is undamaged and does not run under the oven or over any hot or sharp surface.
8. The socket must be readily accessible so that it can be easily unplugged in an emergency.
9. Do not use the oven outdoors.

GROUNDING INSTRUCTIONS

This appliance must be grounded. This oven is equipped with a cord having a grounding wire with a grounding plug. It must be plugged into a wall receptacle that is properly installed and grounded. In the event of an electrical short circuit, grounding reduces risk of electric shock by providing an escape wire for the electric current. It is

recommended that a separate circuit serving only the oven be provided. Using a high voltage is dangerous and may result in a fire or other accident causing oven damage.

WARNING!--Improper use of the grounding plug can result in a risk of electric shock.

Note:

1. If you have any questions about the grounding or electrical instructions, consult a qualified electrician or service person.
2. Neither the manufacturer nor the dealer can accept any liability for damage to the oven or personal injury resulting from failure to observe the electrical connection procedures.

The wires in this cable main are colored in accordance with the following code:

Green and Yellow = EARTH

Blue = NEUTRAL

Brown = LIVE

RADIO INTERFERENCE

Operation of the microwave oven can cause interference to your radio, TV, or similar equipment. When there is interference, it may be reduced or eliminated by taking the following measures:

1. Clean door and sealing surface of the oven.
2. Reorient the receiving antenna of radio or television.
3. Relocate the microwave oven with respect to the receiver.
4. Move the microwave oven away from the receiver.
5. Plug the microwave oven into a different outlet so that microwave oven and receiver are on different branch circuits.

BEFORE CALLING FOR SERVICE

Before asking for service, please check each item below:

- Check to ensure the oven is plugged in securely. If not, remove the plug from the outlet, wait 10 seconds, and plug it in again securely.
- Check for a blown circuit fuse or a tripped main circuit breaker. If these seem to be operating properly, test the outlet with another appliance.
- Check to ensure the control panel is programmed correctly and the timer is set.
- Check to ensure the door is securely closed, engaging the door lock system. If the door is not properly closed, the microwave energy will not flow inside.

IF NONE OF THE ABOVE RECTIFIES THE SITUATION, THEN CONTACT A QUALIFIED TECHNICIAN. DO NOT TRY TO ADJUST OR REPAIR THE OVEN

YOURSELF.

COOKING TECHNIQUES

1. Arrange food carefully. Place thickest areas towards outside of dish.
2. Watch cooking time. Cook for the shortest amount of time indicated and add more as needed. Food severely overcooked can smoke or ignite.
3. Cover foods while cooking. Covers prevent spattering and help foods to cook evenly.
4. Turn foods over once during microwave cooking to speed cooking of such foods as chicken and hamburgers. Large items like roasts must be turned over at least once.
5. Rearrange foods such as meatballs halfway through cooking both from top to bottom and from the center of the dish to the outside.

COOKING UTENSILS GUIDE

1. Microwave cannot penetrate metal. Only use utensils that are suitable for use in microwave ovens. Metallic containers for food and beverages are not allowed during microwave cooking. This requirement is not applicable if the manufacturer specifies size and shape of metallic containers suitable for microwave cooking.
2. Microwave cannot penetrate metal, so metal utensils or dishes with metallic trim should not be used.
3. Do not use recycled paper products when microwave cooking, as they may contain small metal fragments which may cause sparks and/or fires.
4. Round /oval dishes rather than square/oblong ones are recommend, as food in corners tends to overcook.
5. Narrow strips of aluminum foil may be used to prevent overcooking of exposed areas. But be careful don’t use too much and keep a distance of 1 inch (2.54cm) between foil and cavity.

The list below is a general guide to help you select the correct utensils.

Cookware	Microwave	Grill	Convection	Combination*
Heat–Resistant Glass	Yes	Yes	Yes	Yes
Non Heat–Resistant Glass	No	No	No	No
Heat–Resistant Ceramics	Yes	Yes	Yes	Yes
Microwave–Safe Plastic Dish	Yes	No	No	No
Kitchen Paper	Yes	No	No	No
Metal Tray	No	Yes	Yes	No
Metal Rack	No	Yes	Yes	No
Aluminum Foil & Foil Container	No	Yes	Yes	No

* Combination: applicable for both "microwave+grill", and "microwave+convection"

cooking.

SPECIFICATIONS

Power Supply	230V/50Hz
Power Consumption (Microwave)	1400W
Power Consumption (Grill)	1250W
Power Consumption (Convection)	2200W
Rated Microwave Power Output	900W
Operation Frequency	2450MHz
Outside Dimensions	300mm(H)×539mm(W)×441mm(D)
Oven Cavity Dimensions	223mm(H)×354mm(W)×362mm(D)
Oven Capacity	30Litres
Net Weight	Approx. 19.1kg

PRODUCT DIAGRAM

1. Door Safety Lock System
2. Oven Window
3. Roller Ring
4. Shaft
5. Control Panel
6. Wave Guide
   (Please do not remove the mica plate covering the wave guide)
7. Rotisserie Rod
8. Grill Heater 1
9. Grill Heater 2
10. Baking Plate
11. Metal Rack
12. Glass Turntable
13. Turn-grill Rack Bracket

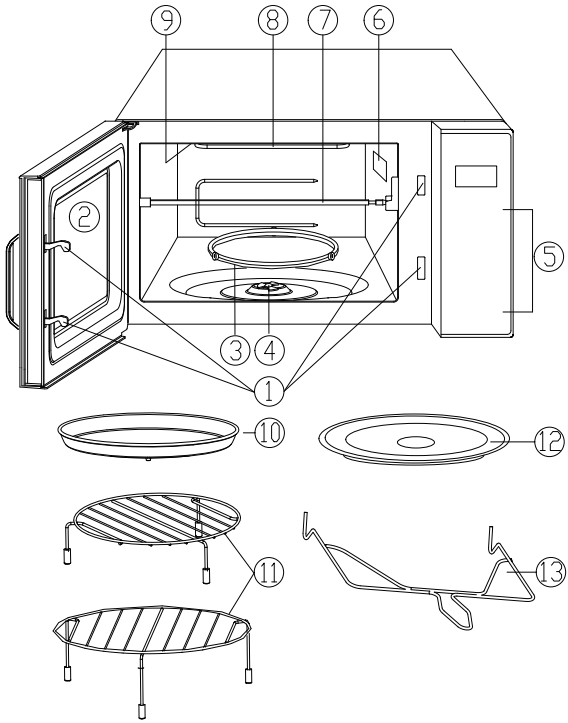

CONTROL PANEL

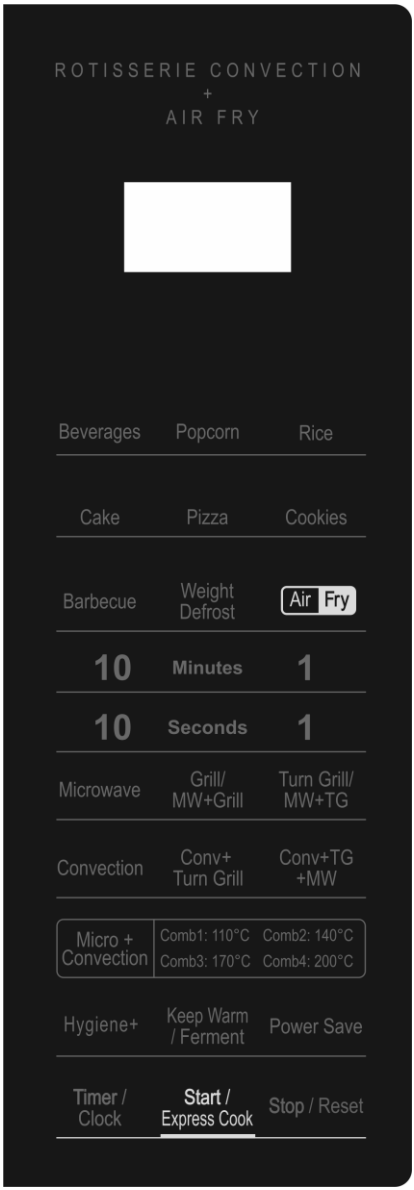

- **DISPLAY SCREEN**

Time, power and indicators are displayed.

- **AUTO COOK MENUS**

Instant settings to cook popular foods.

- **WEIGHT DEFROST**

Pres to defrost food based on weight.

- **AIR FRY**

Use air fry function to enjoy your favorite fried food “Guilt Free”.

- **NUMBER BUTTONS**

Use to set time.

- **MICROWAVE**

Press to select microwave cooking power level.

- **GRILL/MW+GRILL**

Press to set grill cooking program.
Press to set grill and microwave combination cooking program.

- **TURN GRILL/MW+TG**

Press to set turn grill cooking program.
Press to set turn grill and microwave combination cooking program.

- **CONVECTION**

Press to set convection cooking program.

- **CONV+TURN GRILL**

Press to set turn grill and convection combination cooking program.

- **CONV+TG+MW**

Press to set convection, turn grill and microwave combination cooking program.

- **MICRO+CONVECTION**

Press to set convection and microwave

combination cooking program.

- **HYGIENE+**

Press to set Steam Cleaning, deodorization and disinfection programs.

- **KEEP WARM/FERMENT**

Press to set keep warm and fermentation programs.

- **POWER SAVE**

Press to set power saving program.

- **TIMER/CLOCK**

Press to set clock time and timer function.

- **START/EXPRESS COOK**

Press to start cooking programs.
Press to set express cooking program.

- **STOP/RESET**

Press once to temporarily stop cooking or twice to cancel cooking altogether.
It is also used to set child lock.

OPERATION INSTRUCTIONS

- When the oven is first plugged in, a beep will sound and the display screen will show "1:01" (":" flashing) and "".
- During setting, the system will return to standby mode if there is not any operation within 30 seconds.
- During cooking, if press STOP/RESET button once, the program will be paused, then press START/EXPRESS COOK button to resume. But if press STOP/RESET button twice, the program will be cancelled.
- After cooking ends, the display screen will show End and beep will sound every two minutes until user press any button or open the door.
- In the process of operation, press a valid button, the buzzer rings once, but if press a invalid button, the buzzer rings twice.
- The electronically controlling system of the microwave oven has the feature of cooling. As for any cooking mode which cooking time above 2 minutes, open the door or stopping state, the oven fan will work about 3 minutes automatically to cool the oven for prolonging the life of the oven.
- In standby mode or child lock mode, the display screen will show ":" (flashing) if there is not any operation within 5 minutes. Press any button, open or close the door once to exit the mode.

SETTING THE CLOCK

This is a 12- or 24- hour clock. You can choose to set the clock time in 12- or 24- hour cycle by pressing TIMER/CLOCK button.

1. In standby mode, press and hold TIMER/CLOCK button for 3 seconds to select 12- hour clock, then press it again to select 24- hour clock.
2. Use number buttons to set the correct time.
3. Press TIMER/CLOCK or START/EXPRESS COOK button to confirm.

NOTE: Invalid when entering time outside the range, and returns to the current clock.

SETTING THE TIMER

1. In standby mode, during cooking or pausing state, press TIMER/CLOCK button once.
2. Use number buttons to set desired time. The longest time is 99 minutes and 99 seconds.
3. Press START/EXPRESS COOK or TIMER/CLOCK button to confirm.

NOTE: When the countdown ends, the buzzer will beep to remind you. During cooking or pausing state, time countdown can be seen in display for 5 seconds by pressing

TIMER/CLOCK button, you can cancel the program by pressing STOP/RESET button when the display screen shows the time.

MICROWAVE COOKING

1. In standby mode, press MICROWAVE button repeatedly to select power level.
2. Use number buttons to set cooking time. The longest time is 99 minutes and 99 seconds.
3. Press START/EXPRESS COOK button to confirm.

Press MICROWAVE button to select power level:

Press MICROWAVE	Power (Display)	Press MICROWAVE	Power (Display)
Once	100% (P-HI)	7 times	40% (P-40)
Twice	90% (P-90)	8 times	30% (P-30)
3 times	80% (P-80)	9 times	20% (P-20)
4 times	70% (P-70)	10 times	10% (P-10)
5 times	60% (P-60)	11 times	0% (P-00)
6 times	50% (P-50)		

NOTE: If you want to cook at full power level, omit the first step. During cooking, you can check the power level by pressing MICROWAVE button.

EXPRESS COOKING

Use this feature to program the oven to microwave food at 100% power conveniently. In standby mode, press START/EXPRESS COOK button once (Default cooking time is 30 seconds), the oven will start working automatically.

NOTE: During cooking, you can add the cooking time by pressing START/EXPRESS COOK button. Each press to increase 30 seconds, and up to 10 minutes.

GRILL

1. In standby mode, press GRILL/MW+GRILL button once.
2. Use number buttons to set cooking time. The longest time is 99 minutes and 99 seconds.
3. Press START/EXPRESS COOK button to confirm.

MICROWAVE+GRILL

Combination 1: 30% of time for microwave cooking, 70% for grill cooking. Use for fish, potatoes or au gratin.

Combination 2: 55% of time for microwave cooking, 45% for grill cooking. Use for pudding, omelets, baked potatoes and poultry.

1. In standby mode, press GRILL/MW+GRILL button twice or 3 times to select

"Co-1" or " Co-2".

2. Use number buttons to set cooking time. The longest time is 99 minutes and 99 seconds.
3. Press START/EXPRESS COOK button to confirm.

NOTE: During cooking, you can check the combination power level by pressing GRILL/MW+GRILL button.

TURN GRILL

1. In standby mode, press TURN GRILL/MW+TG button once.
2. Use number buttons to set cooking time. The longest time is 99 minutes and 99 seconds.
3. Press START/EXPRESS COOK button to confirm.

MICROWAVE+TURN GRILL

1. In standby mode, press TURN GRILL/MW+TG button twice or 3 times to select "Co-1" or " Co-2".
2. Use number buttons to set cooking time. The longest time is 99 minutes and 99 seconds.
3. Press START/EXPRESS COOK button to confirm.

NOTE: During cooking, you can check the combination power level by pressing TURN GRILL/MW+TG button.

CONVECTION

During convection cooking, hot air is circulated throughout the oven cavity to brown and make crisp foods quickly and evenly. This oven can be programmed for ten different cooking temperatures. They are: 200℃→190℃→180℃→170℃→160℃→150℃→140℃→130℃→120℃→110℃. The longest cooking time is 99 minutes and 99 seconds.

To preheat and cook with convection:

Your oven can be programmed to combine preheating and convection cooking operations.

1. In standby mode, press CONVECTION button repeatedly to select temperature.
2. Press START/EXPRESS COOK button once to confirm.
3. Beeps will sound when the designated temperature is reached. Open the door, place container of food at the center of the turntable.
4. Use number buttons to set cooking time.
5. Press START/EXPRESS COOK button to start.

NOTE: The longest preheat time is 30 minutes, and it cannot be set. When the oven

reaches preheat temperature, the oven will sound beep every 5 seconds and the program will end automatically if If there is not any operation within 30 minutes

To cook with convection:

1. In standby mode, press CONVECTION button repeatedly to select temperature.
2. Use number buttons to set cooking time.
3. Press START/EXPRESS COOK button to confirm.

NOTE: During cooking, you can check the current temperature by pressing CONVECTION button.

MICROWAVE+CONVECTION

This oven has four pre-programmed settings that make it easy to cook with both convection heat and microwave automatically (200℃→170℃→140℃→110℃).

1. In standby mode, press MICRO+CONVECTION button repeatedly to select temperature.
2. Use number buttons to set cooking time. The longest time is 99 minutes and 99 seconds.
3. Press START/EXPRESS COOK button to start.

NOTE: During cooking, you can check the combination cooking power level by pressing MICRO+CONVECTION button.

CONVECTION+TURN GRILL

This oven can be programmed for ten different cooking temperatures. They are: 200℃→190℃→180℃→170℃→160℃→150℃→140℃→130℃→120℃→110℃. The longest time is 99 minutes and 99 seconds.

To cook with preheating:

1. In standby mode, press CONV+TURN GRILL button repeatedly to select temperature.
2. Press START/EXPRESS COOK button once to confirm.
3. Beeps will sound when the designated temperature is reached. Open the door, place container of food at the center of the turntable.
4. Use number buttons to set cooking time.
5. Press START/EXPRESS COOK button to start.

To cook with convection:

1. In standby mode, press CONV+TURN GRILL button repeatedly to select temperature.
2. Use number buttons to set cooking time.
3. Press START/EXPRESS COOK button to confirm.

NOTE: During cooking, you can check the current temperature by pressing

CONV+TURN GRILL button.

CONVECTION+MICROWAVE+TURN GRILL

This oven has four pre-programmed settings that make it easy to cook with both convection heat and microwave automatically (200℃→170℃→140℃→110℃).

1. In standby mode, press CONV+TG+MW button repeatedly to select temperature.
2. Use number buttons to set cooking time. The longest time is 99 minutes and 99 seconds.
3. Press START/EXPRESS COOK button to confirm.

NOTE: During cooking, you can check the combination cooking power level by pressing CONV+TG+MW button.

WEIGHT DEFROST

The defrosting time and power level are automatically set once the food weight is programmed. The frozen food weight ranges from 100 g to 1800 g.

1. In standby mode, press WEIGHT DEFROST button repeatedly to select food weight.
2. Press START/EXPRESS COOK button to start.

NOTE: During defrosting, the system will pause and sound to remind you to turn food over, after that, press START/EXPRESS COOK button to resume.

AIR FRY

For codes "AF-1" or "AF-2" :

1. In standby mode, press AIR FRY button once or twice, the display screen screen will show "AF-1" or "AF-2" .
2. Press START/EXPRESS COOK button to start. The oven will pause and sound after preheating 2 minutes, the display screen will show " " or " ".
3. Use number buttons to set cooking time. The longest time is 99 minutes and 99 seconds.
4. Press START/EXPRESS COOK button to start.

NOTE: After preheating, the buzzer emits two beeps every 10 seconds for 1 minute. If there is not any operation within 1 minute, the buzzer will sound 4 beeps and the system will return to standby mode.

For codes "AF:03 ~ "AF:26" :

1. In standby mode, press AIR FRY button 3 times, the display screen will show "AF-03", then press it repeatedly to select another food code.
2. Press START/EXPRESS COOK button to once.
3. Press AIR FRY button repeatedly to select food weight or servings.

4. Press START/EXPRESS COOK button to start.

NOTE:

- When cooking with a multi-stage menu of grill, microwave and convection, after the first stage (Step 1) of cooking ends, a prompt sound will be emitted, the display screen will show the remaining cooking time, "AUTO" and the corresponding working mode symbol will light up. The buzzer emits two short beeps of "DE-DE" every 10 seconds until the user presses START/EXPRESS COOK button to start the next step (Step 2) of the program.
- After each menu cooking ends, a countdown of 5 seconds is displayed. During this 5 seconds, the door can be opened and closed once to set cooking time (up to 99:99 minutes). If there is not any operation within 5 seconds, the program will end automatically.
- Cooking method for the DOSA menu: After cooking with Dosa 1, a countdown of 10 seconds will be displayed. If the door is opened and closed once within this 10 seconds, the system will automatically switch to the total cooking time display for Dosa 2 until START/EXPRESS COOK button is pressed to confirm and start cooking. Continue cooking in this way until dosa 4, and the display screen will show End directly after cooking ends.

Sr.no	BEVERAGE	COOKWARE	INGREDIENTS	METHOD
1	Plain milk tea	Microwave proof tea cup/ microwave safe kettle Microwave proof cup/	Water- ¾ cup; Milk-¼ cup Tea leaves- 1 tsp Sugar-1tsp	Mix all the ingredients and keep it in the microwave and then select the menu to select the weight and press start. NOTE: Amount of ingredients may differ as per individual preferences.
2	Ginger tea		Water-1/2 cup; Milk-1/2 cup; Tea leaves- 1 tsp;¾ inch crushed ginger Sugar-1tsp	
3	Masala tea		Water-1/2 cup, Whole Milk-1/2 cup Sugar-1tsp; Tea leaves- 1 tsp Masala (crush with mortar and pestle or coffee/spice grinder) : 1 pod cardamom, 2 pea size fresh ginger (mulched), 1-2 big size whole black pepper, 1/8 to 1/6 cinnamon stick	
4	Non Fat Masala tea		Water-1/2 cup, Skimmed Milk-1/2 cup Sugar-1tsp; Tea leaves- 1 tsp Masala (crush with mortar and pestle or coffee/spice grinder) : 1 pod cardomon, 2 pea size fresh ginger (mulched), 1-2 big size whole black pepper, 1/8 to 1/6 cinnamon stick	
5	Cardamom tea		Water-¾ cup; Milk-¼ cup Crush two pieces of cardamon, add to it little Saffron Sugar-1tsp; Tea leaves- 1 tsp	
6	Rose Tea		Water-1/2 cup; Milk-1/2 cup Tea leaves- 1 tsp Sugar-1tsp	
7	Tulsi Tea		Water-1 cup Tulsi leaves-1 tsp	
8	Chocolate flavour tea		Water-1/2 cup,Milk-1/2 cup Chocolate flavorTea leaves- 1 tsp Sugar-1tsp	
9	Lemon tea		Water-1 cup ;Tea leaves-1 tsp Fresh lemon juice-1 tsp Sugar-1tsp	
10	Coffee		Water-¾ cup; Milk-¼ cup; Coffee-1 tsp Sugar -1tsp	
11	Jeera Water		Water -¾ cup, Jeera - 1 tsp	
12	Herbal Water		Water -200ml, Saunf –a pinch, Ajwain –a pinch, Cardamom-1, Tulsi leaves---2-3, Mint leaves-2 to 3	

13	Sole Kadhi /Cocum Saar	Microwave proof tea cup/microwave safe kettle	Water-200ml Cocum-5 Salt- To taste Ginger (grated)- ¼ tsp Green chillies (slit)- 2 Coriander (chopped fine)- 1 tbsp	Mix water and cocum in a microwave proof cookware, keep it in the microwave and then select the beverage option for selecting the serving size and press start. Strain and add ginger and chillies and allow it to cool. Add coriander and refrigerate until serving time. **NOTE:** Amount of ingredients may differ as per individual preferences but the volume of water will remain the same. It is an excellent appetizer.
14	Bel ka Sherbet	microwave safe kettle	Stone Apple (belfal) ,halved and seeded-1 Sugar1/3 cup Lemon juice2 1/2 teaspoons	Scoop out the flesh of the stone apple with a spoon and put into a Microwave safe kettle. Add 2 cups water and cook by selecting the menu. Add sugar and mix well. Add lemon juice and mix and cook till sugar dissolves. Remove from heat and strain. Set aside to cool then keep in a refrigerator to chill. Pour into glasses and serve chilled.
15	Aam Ka Panna	Microwave safe kettle	Raw mango 1 large Cumin powder 1 teaspoon Black peppercorns, crushed 4-5 Black salt (kala namak) to taste Asafoetida a pinch Sugar 1/2 cup	Wash and cut raw mango white portion and pour 1 cup water. Cook by selecting the programme . Let it cool. Mash and strain the pulp. Add cumin powder, crushed peppercorns, black salt, asafeotida and sugar. Mix well till sugar is dissolved. Divide the mixture into four tall glasses; fill it up with chilled water. Stir well and serve.
16	Cocoa Drink	Microwave proof cookware	3 tbsp sugar 1 tbsp cocoa powder 5 cubes chocolate cubes a pinch of salt 2 cups milk	Combine sugar, cocoa, salt ,chocolate cubes and microwave for 30 seconds. Add milk and boil the contents by selecting Beverage programme.
17	Hot Chocolate Drink	Microwave proof cookware	250 ml whole milk 113 gms milk chocolate 1/2 tsp. cornstarch	Combine all the ingredients , cook using beverage programme.Stirr in-between .Serve hot.

Sr.no	POPCORN	COOKWARE	INGREDIENTS	METHOD
18	Plain Popcorn	Borosil with a lid, covered loosely or ready to cook popcorn in microwave proof bag.	Popcorn and salt	Pop the popcorn with olive oil, and mix the grated cheese/dry fruits/ grated chocolate or sugar caramel as per desired choice for flavor.
19	Cheese popcorn		Popcorn and grated cheese	
20	Nutty Popcorn		Dry fruit roasted and popcorn	
21	Chocolate Popcorn		Grated chocolate and popcorn	
22	Buttery popcorn		Popcorn and butter	
23	Caramel popcorn		Popcorn and sugar caramel.	

Sr.no	RICE	INGREDIENTS	METHOD
Cookware : Microwave Safe rice cooker			
24	Plain rice	Rice 1 cup Water 2 cups	Wash and soak the rice for about half an hour. Drain water from the rice and add 2 cups or 1 ¾ cup water, cover and cook, selecting the menu. Allow it to stand for 5 to 10 minutes and then serve hot.
25	Prawn Biryani	Uncooked rice (Soaked for 30 minutes)-1 cup, peeled and deveined tiger prawns-100gms,ginger garlic paste-1 tbsp, Garam masala-1 tbsp, black pepper -1 tbsp,cloves-4,cardamom seeds-4,cinnamon stick, salt-to taste, plain yogurt- ½ cup, vegetable oil- ¼ cup, water 2 cup, Chicken bouillon cube-5	Stir together the prawns, ginger garlic paste, garam masala, black pepper, cloves, cardamom seeds, cinnamon sticks, salt, yogurt, and oil in a microwave safe bowl until well mixed. Stir the rice, water, and chicken bouillon cubes and mix well. Add water and cook by selection the menu Rice. Discard cinnamon stick, cloves, and cardamom seeds before serving.
26	Rajasthani Pulao	1 ¼ cup long grain rice 1 tablespoons ghee or oil, 2 medium onions- finely sliced ,2 sticks cinnamon, 3 cardamom pods, bruised, 5 whole cloves,8 whole black pepper,2 ½ cups hot stock or water ,Salt to taste. **Note:** Serves 2	If the rice needs washing, wash well in several changes of cold water and leave to soak for 1 hour. Then drain in a colander for at least 30 minutes. Mix all the ingredients, add water or stock and cook by selecting the menu Rice. Serve hot with curry.
27	Rice with Peas	1 1/2 cups long grain rice,1 tablespoon ghee,4 whole	Wash the rice well and leave to soak in cold water for

		cloves,1 small cinnamon stick,3 or 4 cardamom pods, bruised,1 teaspoon cumin seeds,1/2 teaspoon ground turmeric ,1 1/2cups shelled green peas and diced carrots ,2 1/2 teaspoons salt,3 1/4 cups hot water	30 minutes, then drain well. Mix all the ingredients, add water or stock and cook by selecting the menu. Remove whole spices, fork rice grains lightly and serve hot with meat or vegetable curries.
28	Rice in coconut milk	Coconut milk-2 cup Rice -1 cup Carrot-50 gms Beans-50 Gms Ghee-1 tbsp Bay leaf Cloves-4 Salt to taste Poppy seeds-1/4 tsp	Wash and soak rice for 10 minutes. Mix all the ingredients, and cook by selecting the menu.
29	Namkin Chawal	1 cup long grain rice ,2 cups hot water, 2 teaspoons ghee ,2 1/2 teaspoons salt	Wash rice well and soak I hour in cold water. Mix all the ingredients, and cook by selecting the menu. Lift lid to allow steam to escape for about 5 minutes, and then lightly fluff up rice with fork, taking care not to mash the grains, which will be firm, separate and perfectly cooked. Dish up using a slotted metal spoon rather than a wooden spoon, which will crush the grains. Serve with curries or other spiced dishes.
30	Veg Pulao	1 cup Rice ,2 cups Water, 1/4 cup chopped Vegetables,1/2" Cinnamon stick,2 Cloves,2 Cardamom, Salt as per taste,1/4 teaspoon turmeric powder,1 teaspoon coriander powder ,2 Chillies ,4 tomatoes, ½ cup Coconut (grated),1 bunch Coriander leaves,2 pieces Garlic,1/ 2" piece Ginger (made into a paste),2 tablespoons Butter,1 onion cut lengthwise	Mix all the ingredients, and cook by selecting the menu. Serve Hot with Raitha.
31	Spiced Rice	1 cup Rice, 2 cups Water, Cinnamom, Cloves.Salt to taste.	Mix all the ingredients, and cook by selecting the menu.
32	Pongal	Rice (soaked for 30 minutes) -1 cup, green gram dal-4tbsp,ginger (finely	Drain soaked rice and dal, add ginger and cook by selecting the menu.

		chopped)- 1tbsp,curry leaves-few, broken cashewnuts-4tbsp,black pepper-1 ½ tsp, cumin seeds-1tsp,ghee-3 -4tbsp,water 3 ½ cup, salt as per taste.	Tip to serve: Microwave cashew nuts, pepper and cumin seeds in ghee for 2 ½ minutes and add it to rice-dal mixture. Mix well and serve steaming hot with ghee on top.
33	Khichdi	Rice -1 cup, tur dal (arhar dal-1/2 cup, Ghee or oil-1tbsp, Hing powder-1/4 tsp, Laung-3-4 , Dalchini (cinnamon)-2 inch stick, Jeera-1/2 tsp, Dry red chillies (broken to 2-3 pieces) -2 no ,groundnuts roasted-25 gms , Turmeric powder- ¼ tsp, salt as per taste, water 3 cups.	Wash and soak dal and rice for 30 minutes. Mix all the ingredients, and cook by selecting the menu. Serve hot with ghee and kadhi.
34	Indian Sticky Rice	Sticky Rice-1 cup Milk-2 cup Water-1 cup Sugar-1/2 cup Coconut Grated-1/4 cup Cashewnuts-1/4 cup Ghee-2 tbsp	Wash and soak dal and rice for 30 minutes. Mix all the ingredients, and cook by selecting the menu. Serve hot with ghee .
35	Jeera Rice	1 cup basmati rice ,1 tsp shahjeera or caraway seeds ,1 black cardamom ,1 green cardamom ,2-3 black peppercorns ,2 cloves ,1 inch cinnamon ,2 tsp ghee ,2 cups water .	Wash and soak dal and rice for 30 minutes. Mix all the ingredients, and cook by selecting the menu. Once done, remove the microwave safe rice cooker and let it stand for 5 minutes.
36	Methi Rice	Methi (Fenugreek leaves) 1 cup chopped (you can use the frozen one) 1 cup Basmati rice ,2 to 4 black Peper (Kali Mirch), 2 Cloves 1 Cinnamon stick, 2 Green Elaichi (Cardamom), 1 Medium sized sliced Onion, 1/2 Cup sweet corn kernels 1/4 Teaspoon turmeric powder (haldi) ,1 Tablespoon butter 1 Tablespoon oil ,Water 2	Wash the rice well and leave to soak in cold water for 30 minutes, then drain well. Mix all the ingredients, and cook by selecting the menu.

		cups Salt to taste	
37	Carrot rice	1cup Basmati Rice2 medium onions chopped 2 cups water 3 carrots grated 2 tsp fried groundnuts cinnamon sticks ¼ tsp cloves Oil -1 tbsp Salt as per taste	Wash the rice well and leave to soak in cold water for 30 minutes, then drain well. Mix all the ingredients, and cook by selecting the menu.
38	Mint Rice	1 Thinly sliced Onions 1 chopped Tomatoes 1/4 Bunch of Mint Leaves 1 Cups of Basmati ½ tsp Red Chili Powder ¼ tsp Turmeric Powder ¼ tsp Fresh Ginger Paste ¼ tsp Fresh Garlic Paste 1Green Chilies slit into half 2 Bay leaves 1 inch cinnamon stick ¼ tsp cloves Fried Cashews -2tbsp Ghee 1tbsp Salt (As required)	Wash the rice well and leave to soak in cold water for 30 minutes, then drain well. Mix all the ingredients, and cook by selecting the menu.
39	Sweet Corn Rice	1 Cup Basmati Rice ½ cup Fresh corn 1 finely chopped Onion ½ tsp Grated ginger 2 cloves ¼ tsp Black Pepper Powder Chopped Coriander leaves Oil -1tbsp Salt to taste	Wash the rice well and leave to soak in cold water for 30 minutes, then drain well. Mix all the ingredients, and cook by selecting the menu.
40	Paushtik Khichdi	1/2 cup rice 1 tablespoon moog dal 1 tbsp tur dal 1 tomatoes 1 onion 1 cups leafy greens (plus you could include any other vegetable that you fancy) salt 1 teaspoon ghee/ oil 1/2 teaspoon turmeric 1/2 teaspoon red chili powder	In a microwave safe rice cooker put together the rice and the two dals. Wash thoroughly. Add the chopped onion, tomatoes, greens and vegetables. Add all the spice powders. Pour about 1 glasses of water and a teaspoon of oil or ghee. After cooking , add salt and then prepare the tadka and pour on the khichdi. Serve hot is a bowl .

		1/2 teaspoon garam masala powder tadka/ seasoning 1 teaspoon oil 1/2 teaspoon mustard seeds 1 pinch asafoetida 4-5 curry leaves	
41	Palak Pulao	1 cup Rice , ½ bunch palak (washed & chopped) ,2 cups Water, 1/4 cup chopped Vegetables,1/2" Cinnamon stick,2 Cloves,2 Cardamom, Salt as per taste,1/4 teaspoon turmeric powder,1 teaspoon coriander powder ,2 Chillies ,4 tomatoes, ½ cup Coconut (grated),1 bunch Coriander leaves,2 pieces Garlic,1/ 2" piece Ginger (made into a paste),2 tablespoons Butter,1 onion cut lengthwise	Mix all the ingredients, and cook by selecting the menu. Serve Hot with Raitha.

Sr.no	CAKE	INGREDIENTS	METHOD
Cookware : Cake tin , greased with butter and maida .			
42	Vanilla Sponge Cake	100gms Maida, 50gms cornflour 150gms sugar Baking powder -1/2 tsp, 4eggs Vanilla essence -1tsp	Separate egg white and yoke. Whisk egg whites until peak stage. Gradually add sugar powder and mix well , fold in flour + baking powder (Sieved).Add essence /additional ingredients based on the type of flavor sponge cake you are preparing. Bake by selecting the menu CAKE.
43	Whole Wheat Sponge Cake	50gms Maida, 50gms Whole wheat flour, 50gms cornflour 150gms sugar, 4eggs Vanilla essence -1tsp	
44	Chocolate Sponge Cake	100gms Maida, 50gms cornflour 150gms sugar, 20gms cocoa powder 4eggs	
45	Coffee Sponge Cake	100gms Maida, 50gms cornflour 150gms sugar, 4eggs Instant Coffee -2tsp	
46	Dark Chocolate Sponge Cake	100gms Maida, 50gms cornflour 150gms sugar 20gms dark chocolate grated, 4eggs	
47	Spice Mix Sponge Cake	100gms Maida, 50gms cornflour 150gms sugar, 4eggs Spice mix powder (laung/cinnamon) -1tsp	
48	Strawberry Sponge Cake	100gms Maida, 50gms cornflour 150gms sugar, 4eggs Strawberry essence -1tsp	
49	Cinnamon Sponge Cake	100gms Maida, 50gms cornflour 150gms sugar, 4eggs cinnamon powder -1tsp	
50	Chocó chips Sponge Cake	100gms Maida, 50gms cornflour 150gms sugar 20gms Choco Chips, 4eggs, Vanilla essence -1tsp	
51	Coconut and Lime Sponge Cake	100gms Maida, 50gms cornflour 150gms sugar 20gms Dedicated Coconut, 4eggs Lime Zest of 1/4th lime. Vanilla essence -1tsp	
52	Orange Sponge Cake	100gms Maida, 50gms cornflour 150gms sugar, 4eggs Orange essence -1tsp	

Sr.no	PIZZA	INGREDIENTS	METHOD
Cookware : Baking plate			
53	Mix Veg. Pizza	Pizza base, thinly sliced mix veg, cream cheese, mozzarella cheese and pizza sauce, cream cheese.	Spread pizza sauce over pizza, spread cream cheese, arrange mix veg and then sprinkle with mozzarella cheese and cook by selecting the menu Pizza.
54	Pickled Ginger Pizza	Pizza base, toppings of your choice, Pickled ginger minced mozzarella cheese and pizza sauce.	Apply Pizza sauce on Pizza base, arrange Precooked toppings, Grate mozzarella cheese, Sprinkle pickled ginger and cook by selecting the menu.
55	Capsicum Pizza	Pizza base, Sliced capsicum, mozzarella cheese and pizza sauce.	Apply Pizza sauce on pizza base, place the sliced capsicum slices , grate mozzarella cheese and cook by selecting the menu.
56	Paneer Pizza	Pizza base, cut pieces of paneer (Tikka) , mozzarella cheese and pizza sauce.	Apply Pizza sauce on pizza base, arranged paneer pieces, grate mozzarella cheese and cook by selecting the menu.
57	Savoury onion pizza	Pizza base, fried slices of onion with olive oil, Pizza cheese and pizza sauce.	Brush the base with olive oil, Spread the onion slices, grate Pizza cheese and cook by selecting the menu.
58	Corn & Mushroom Pizza	Pizza base-1,tomato sauce/pizza sauce-1tbsp,onion sliced-1 small, red bell pepper-1 sliced, Mushroom -1/2 cup, baby corn-8 no., grated mozzarella cheese-1 cup, oregano/pizza seasoning-2tsp,chilly flakes-1/2 tsp,olive oil-1/2 tsp	Spread the tomato or pizza sauce evenly over the pizza base. Sprinkle ½ cup of cheese over it, now spread onion, mushroom and bell pepper, Place 6 baby corn pointing to the center.Dizzle olive oil .Sprinkle oregano or pizza seasoning over it. At the end sprinkle remaining cheese and cook by selecting pizza menu. Serve hot sprinkling chilly flakes as required.
59	Veg. cheese Pizza	Pizza base, Indian style dry veg preparation, Pizza cheese and pizza sauce, cream cheese.	Spread pizza sauce over pizza, spread cream cheese, arrange dry veg.(cooked veg of your choice) and then sprinkle with cheese and cook by selecting the menu.
60	Cheese pizza	2 teaspoons olive oil 1 cup fat-free bottled pizza sauce 2 cups shredded part-skim mozzarella cheese 1/2 cup grated fresh Parmesan cheese	Brush the base with olive oil, Spread sauce in an even layer over crust, leaving a 1/4-inch border. Top with mozzarella and Parmesan cheeses. Cook by selecting the menu.

Sr.no	PIZZA	INGREDIENTS	METHOD
61	Indian Spiced Pizza	Pizza Base Tomato- 2 medium size (chopped finely) Onion - 2 Medium size (chopped finely) Green chilly 6-8 (chopped finely) Cilantro - 2 tbsp. (chopped finely) Carrots - 2 (grated finely) Fresh lime juice - 1 tbsp. Red chilly powder - 1tsp. (Optional) Olive oil - 3 tbsp. Turmeric - 1 tsp. Mozzarella Cheese	Heat 2 tbsp olive oil in a pan. Add turmeric, onion and green chillies and cook. Add tomato and let it cook. Add salt, red chilly powder (for extra spicy) and stir for 2 minutes. Place the tomato preparation on the pizza base and spread it. Sprinkle grated carrots and grated pizza Cheese. Cook using the, menu Pizza. Sprinkle cilantro, and serve hot.
62	Roasted Garlic and Pepper Pizza	1 large head garlic, unpeeled 2 tablespoons olive oil 1 large red onion, cut into 1/2-inch-thick rings 1 prepared pizza crust 2 cups grated mozzarella cheese 1/2 cup roasted red bell peppers, cut into 1/2-inch-thick strips 2/3 cup -crumbled feta cheese 4 tablespoons chopped fresh basil or 1 tablespoon dried 2 tablespoons chopped fresh parsley	Slice top off garlic head, Drizzle with 1 tablespoon olive oil. Roast on tawa .Add onion slices and brush onion with 1/2 tablespoon olive oil. Cook garlic and onion until garlic cloves are light brown and soft and onion is tender. Using on/off turns, grind onion and garlic into smooth paste, adding enough reserved oil. (Onions and garlic mixture can be prepared 1 day ahead. Cover separately and refrigerate.) Place Pizza crust on baking sheet or pizza pan. Spread garlic paste evenly over crust. Top with mozzarella cheese, onion, pepper strips and feta cheese. Sprinkle with 2 tablespoons basil and 1 tablespoon parsley. Cook using the, menu Pizza.
63	Shrimp Pizza	1 tablespoon sugar 1 tablespoon water 1 cup peeled shrimp 1 shallot, sliced 1 clove garlic, sliced 1 thai chili, sliced 1/2 tablespoon fish sauce 1 prepared pizza crust 1/2 cup shredded mozzarella 1/4 cup parmesan chopped cilantro	In a non-stick pan, combine the sugar and water over medium to medium-high heat. It will take a little while, but be patient, the water will boil down and will be come golden brown. When it's super bubbly and just slightly caramel coloured, add the shrimp, shallot, garlic, chili, and fish sauce. Turn the heat down to medium. Stir to coat and cook shrimp until firm and cooked through. By the time the shrimp are done cooking, the sauce will have cooked down into a sticky, sweet, spicy sauce that will cling to each shrimp. Remove the pan from the heat and let rest. Spread on the shredded mozzarella and sprinkle on the parmesan on pizza crust. Top with the caramelized shrimp. Cook using the, menu Pizza.

Sr.no	PIZZA	INGREDIENTS	METHOD
64	Barbecue Chicken Pizza	1 pizza base 1/3 cup + 2 Tablespoons your favorite BBQ sauce 1 cup cooked, sliced chicken breast 2/3 cup shredded mozzarella cheese 2/3 cup shredded smoked gouda cheese* 1/2 small red onion, thinly sliced fresh cilantro, for topping	Toss 2 Tablespoons of BBQ sauce with the cooked, chopped chicken to coat it. Set aside. Top the pizza crust with the BBQ sauce. Add more or less BBQ sauce depending on your taste. Then layer on the shredded mozzarella, then the BBQ-coated chicken, shredded gouda, then the onion slices. Cook using the, menu Pizza.
65	Chicken Tikka Pizza	1 pizza base Chicken tikka Chunks -1cup Sliced onion -1 Capsicum Sliced-1 Tomato Sliced-1 1 cup shredded mozzarella cheese Red chillies -1 (Crushed) Olive oil to brush Pizza Sauce -3 tbsp.	Brush pizza base with olive oil. Top the pizza crust with the Pizza sauce. .Then layer on the shredded mozzarella, then the chicken tikka Chunks, arrange sliced tomato, onion and capsicum., sprinkle red chilli on top . Cook using the, menu Pizza.
66	Fruit Pizza	1 pizza base Butter-1tsp Condense Milk -3tbsp Cashew nuts-1/4cup Almonds-1/4 cup Raisins -1/4 cup White chocolate bar	Apply butter on top of pizza base and bake .Spread condense milk on Pizza Crust. Arrange dry fruits. Cook using the, menu Pizza. Top up with grated white chocolate and serve.
67	Spinach and Cheese Pizza	3 tablespoons extra virgin olive oil 1 leek, thinly sliced 2 garlic cloves, minced 1/4 teaspoon salt 1/4 teaspoon cracked black pepper 5 ounces fresh spinach leaves 1/2 Basic Pizza base 1/2 cup ricotta cheese 1/3 cup crumbled feta cheese 1/2 cup (2 ounces) shredded Kasseri or provolone cheese 2 tablespoons crushed cashew nuts	Heat 2 tablespoons oil in a skillet over medium-high heat. Add leek and garlic; sauté 5 minutes or until tender. Stir in salt and pepper. Add spinach, in batches; cook 2 minutes or just until wilted. Brush pizza crust with remaining 1 tablespoon olive oil. Spread spinach mixture to edges of crust; top with cheeses and cashewnuts. Cook using the menu Pizza.

Sr.no	PIZZA	INGREDIENTS	METHOD
68	Spicy Lamb mince Pizza	Pizza Base Olive oil spray 1 red onion thinly sliced 1 red capsicum thinly sliced 100gms lamb mince ½ tsp cumin seeds ½ tsp ground paprika 1tsp ground coriander Pizza Sauce -3 tbsp 1 cup shredded mozzarella cheese	Meanwhile, heat a large non-stick frying pan over medium heat. Spray with olive oil spray. Add the onion and capsicum. Cook, stirring occasionally, for 4-5 minutes or until soft. Increase heat to high. Add the mince. Cook, stirring with a wooden spoon to break up any lumps, for 4-5 minutes or until the mince changes colour. Add the cumin, paprika and coriander. Cook, stirring, for 1-2 minutes or until aromatic. Remove from heat. Stir in the currants and parsley. Spread Pizza sauce on pizza base. Spread Lamb mince Over it. Top it up with mozzarella Cheese and Cook selecting the menu Pizza.
69	Corn and Chicken Pizza	Pizza base-1,tomato sauce/pizza sauce-1tbsp,onion sliced-1 small, red bell pepper-1 sliced, Boiled and Shredded Chicken -1/2 cup, baby corn-8 no., grated mozzarella cheese-1 cup, oregano/pizza seasoning-2tsp,chilly flakes-1/2 tsp,olive oil-1/2 tsp	Spread the tomato or pizza sauce evenly over the pizza base. Sprinkle ½ cup of cheese over it, now spread onion, Chicken and bell pepper, Place 6 baby corn pointing to the center.Dizzle olive oil .Sprinkle oregano or pizza seasoning over it. At the end sprinkle remaining cheese and cook by selecting pizza menu. Serve hot sprinkling chilly flakes as required.

Sr.no	COOKIES	INGREDIENTS	METHOD
Cookware : Baking plate + Butter paper			
70	Chocochip Cookies	110 grams- unsalted butter (room temperature), 75 granulated white sugar, 80 gms firmly packed -light brown sugar , 1 large eggs , 1 teaspoons pure vanilla extract , 150gms maida, ½ teaspoon baking soda , ½ teaspoon salt , 140 gms semisweet chocolate chips , 100 grams-walnuts or pecans, coarsely chopped (optional)	In the bowl , beat the butter until smooth and creamy with a electric beater. Add the white and brown sugars and beat until fluffy (about 2 minutes). Beat in eggs, one tbsp at a time, making sure to beat well after each addition. Add the vanilla and beat until incorporated. Scrape down the sides of the bowl as needed. In a separate bowl, combine flour, baking soda, and salt. Add the dry ingredients to the egg mixture and beat until incorporated, adding the chocolate chips and nuts (if using) about half way through mixing. If you find the dough very soft, cover and refrigerate until firm (from 30 minutes to two hours). For large cookies, use about a 2 tablespoon ice cream scoop or with two spoons, drop about 2 tablespoons of dough (35 grams) onto the prepared baking sheets. Bake using the menu . Cool completely on wire rack.
71	Peanut butter Cookies	170 grams unsalted butter (room temperature),105 grams light brown sugar,100 grams-granulated white sugar,1 large egg, 1 teaspoon pure vanilla extract,185 grams-peanut butter (smooth or crunchy),260 grams-all purpose flour,1/2 teaspoon baking soda, 1/4 teaspoon salt, 1/2 cup chopped peanuts	Beat the butter with a electric mixer. Add the peanut butter and sugars and beat until light and fluffy (about 2 - 3 minutes). Add the egg and vanilla extract and beat to combine. Beat in the milk. In a separate bowl whisk together the flour, baking soda, and salt. Add to the peanut butter mixture and beat until incorporated. Cover and chill the batter for about an hour, or until firm enough to roll into balls. Roll the batter into 1 inch (2.54 cm) round balls. Place the granulated white sugar in a shallow bowl and roll each ball in the sugar. Place on the prepared baking sheet, spacing about 2 inches (5 cm) apart. Bake the cookies by selecting the menu. Cool completely on a wire rack.
72	Oatmeal Cookies	110 grams- walnuts or pecans, toasted and chopped (optional), 170 grams unsalted butter (room temperature), 210 grams packed light brown sugar,1 large egg, 1 teaspoon pure vanilla extract,105 grams- Maida,1/2 teaspoon baking soda,	In the bowl ,beat the butter and sugar until creamy and smooth (about 2 - 3 minutes). Add the egg and vanilla extract and beat to combine. In a separate bowl, whisk together the flour, baking soda, salt, and ground cinnamon. Add the flour mixture to the creamed mixture and beat until incorporated. Stir in the nuts, oats, and dried cranberries or raisins. Make small balls of batter and and space the

		1/2 teaspoon salt, 1/2 teaspoon ground cinnamon,260 grams rolled oats, 1 cup dried cranberries, or raisins. To toast nuts: Place nuts on a baking sheet and bake for 8-10 minutes or until lightly browned and fragrant. Let cool and then chop into pieces.	cookies about 2 inches (5 cm) apart on the baking sheet. Then wet your hand and flatten the cookies slightly with your fingers so they are about 1/2 inch (1.25 cm) thick. Bake the by selecting the menu. Remove from oven and let the cookies cool a few minutes on the baking sheet before transferring them to a wire rack to cool.
73	Sugar Cookies	½ cup butter (softened), ½ cup sugar , ½ large eggs ,1 tsp. milk ,1 ½ cup maida , ½ tsp. baking powder ,1/4 tsp. salt	Using electric mixer, mix up the butter and sugar properly. Mix in egg and milk. Mix flour, salt and baking powder in a bowl. Mix together butter mixture and flour mixture with the electric mixer. Roll into ¼ inch thick , Cover in plastic wrap and store at a low temperature for 2 to 24 hours. Using cookies cutter cut down cookies about ¼ inch in various shapes. Put cookies on sheet and bake by selecting the menu. Take out cookies from cookies sheet and keep in cool place for 10 minutes
74	Butter Cookies	1 cup butter ,1 cup white sugar ,1 egg , 2 2/3 cups maida , 1/4 teaspoon salt , 2 teaspoons vanilla extract	In a large bowl, cream together the butter and white sugar until light and fluffy. Beat in the egg, then stir in vanilla extract. Combine the flour and salt; stir into the sugar mixture. Cover dough, and chill for at least one hour. Chill cookie sheets. Press dough out onto ungreased, chilled cookie sheets. Bake using the menu . Remove from cookie sheets to cool on wire racks.
75	Wheat Bran Cookies	100 gms salted butter , 125 gms cup sugar , ½ egg , 100 gms wheat bran , 275 gms cups flour	Stir butter and sugar until creamy, add the egg and mix well. Add the wheat bran and the flour and work it into dough. Make small balls, put them on a baking sheet and flatten them with for example a fork. Bake by selecting the menu.
76	Short Bread	226 grams- unsalted butter (room temperature), 1 teaspoon pure vanilla extract 120 grams- powdered or icing sugar , 325 grams Maida,1/2 teaspoon salt ,260 grams- dark raisins Glaze: 1 large egg, lightly beaten	In the bowl of your electric mixer (or with a hand mixer), beat the butter and vanilla extract until smooth and creamy (about one minute). Add the sugar and beat until light and fluffy. In a separate bowl whisk the flour with the salt and then add the flour mixture to the butter mixture and beat until the dough just comes together. Divide the dough into two halves, making one half slightly larger than the other half. Spread the smaller half of dough over the bottom of the prepared pan and gently press the

			dough, with your fingertips or the back of a spoon, to form an even layer. Sprinkle the raisins evenly over the dough and gently press the raisins into the dough. Take the other half of dough and using your fingers, crumble it over the top of the raisins. Then lightly press the dough into an even layer. Take the lightly beaten egg and, using a pastry brush, coat the top of the shortbread with the egg wash. Then, with the tines of a fork, slowly drag the fork back and forth across the shortbread to make a decorative pattern. Cut the shortbread into about 1 x 3 inch (2.5 x 7.5 cm) rectangular bars.Bake by selecting the menu.
77	Thumbprint cookies	113 grams- unsalted butter (room temperature), 50 grams- granulated white sugar, 1 large egg (separated), 1/2 teaspoon pure vanilla extract,130 grams- maida, 1/8 teaspoon salt, 100 grams- hazelnuts, almonds, walnuts, toasted - finely chopped 1/2 cup jam	In the bowl of your electric mixer (or with a hand mixer), beat the butter and sugar until light and fluffy (2-3 minutes). Add the egg yolk and vanilla extract and beat until combined. In a separate bowl, whisk together the flour and salt. Add the flour mixture to the batter and beat just until combined. If the batter is too soft to roll into balls, refrigerate for about 30 minutes. In a small bowl, whisk the egg white until frothy. Place the chopped nuts on a plate. Roll the dough into 1 inch (2.5 cm) balls. Taking one ball of dough at a time, dip first into the egg white and then lightly roll in the nuts. Place on the prepared baking sheet spacing about 1 inch (2.5 cm) apart. Using your thumb or end of a wooden spoon, make a indentation into the center of each cookie and fill with about 1/2 teaspoon of jam. Bake by selecting the menu. Remove from oven and place on wire rack to cool.

Sr.no	COOKIES	INGREDIENTS	METHOD
78	Garam Masala Cookies	2 1/4 cups all-purpose flour 1 teaspoon baking soda 1 heaping teaspoon salt 2 tablespoons garam masala 1 teaspoon cinnamon 1 cup (2 sticks) butter, one softened 1/2 cup granulated sugar 1 cup packed light brown sugar 1 teaspoon vanilla extract 2 large eggs	Mix flour, baking soda, salt, garam masala, and cinnamon in a medium bowl. Set aside. In a sauce pan, heat 1 stick of butter over medium high heat until completely melted. Keep cooking the butter until it turns a rich golden brown color and begins to take on a warm, nutty smell. This may take up to 6 or 7 minutes. Be careful not to burn your butter! Pour into a heat resistant bowl and set aside for 10-15 minutes. In another bowl mix brown sugar, granulated sugar, and softened stick of butter with an electric mixer, adding cooled browned butter gradually until completely combined. Add vanilla. Add eggs one at a time, blend until creamy. Slowly add flour mixture and mix, scraping the sides of the bowl to ensure even distribution throughout the dough. Drop rounded teaspoons of dough on to an ungreased cookie sheet 2 inches apart and bake by selecting the menu. Don't overbake these cookies – they should look almost underdone when you take them out of the oven. Set on wire racks to cool for 5 minutes, then remove from cookie sheet to cool completely.
79	Cashew Cookies	Ingredients A: 210g butter 80g icing sugar 1 egg yolk 1/2 tsp vanilla essence Ingredients B: 250g plain flour 60g corn flour 1/4 tsp baking soda 1/8 tsp cinnamon powder Ingredients C: 300g cashew nuts (100 gms roasted -chopped and 200gms unroasted) 2 egg yolks (beaten for eggwash)	Cream butter and icing sugar lightly at speed 1 using k beater. Add in egg yolk and vanilla essence. Mix well. Stir in Ingredients B and chopped cashew nuts. Mix well. Chill dough in fridge for 40 minutes. Remove dough and roll into small balls. Arrange on a lined baking tray. Brush with beaten egg yolk and place a whole (or half) cashew nuts on top of cookies and press slightly to flatten it. Bake by selecting the menu. Cool and keep in airtight container.

Sr.no	COOKIES	INGREDIENTS	METHOD
80	Melting Moments	100 gm (3/4 cup) plain flour 30 gm (2 tbsp) cornflour 60 gm (1/2 cup) icing sugar 100 gm (1/2 cup) butter 2 tbsp egg 1 tsp vanilla extract	Sieve the flour and the cornflour together into a bowl. In another bowl mix in the butter and the sugar with a hand blender or a wire whisk or put in the stand mixer with the paddle attachment and blend until smooth and creamy. Put in the flour mixture and vanilla extract and mix until smooth and there are no lumps. Add egg and mix well.Empty the contents in piping bag and pipe it onto a parchment paper as per desired shape .
81	Coconut Snowball Melting Moments	Maida (All Purpose Flour) – 100gms Corn flour - 30 gms Salt –a pinch Powdered or icing sugar -20 Unsalted Butter - 1 cup (200 gms) Vanilla essence - 1 tsp Chopped nuts - 2 to 3 tbsp (walnuts & cashewnuts) For the topping: Powdered or icing sugar – to coat cookies	In a bowl add butter, icing sugar and vanilla essence - beat well until creamy. Now add the chopped nuts and give a quick stir. Mix in maida and cornflour.Add salt and mix well. Pinch equal sized balls and roll them with your palms and place it in prepared baking sheets, spacing about 1 inch apart. Bake using the programme cookies. Once done , coat the cookies in powdered sugar while they are still warm
82	Strawberry Melting moments	125g unsalted butter, softened ½ teaspoon vanilla extract ½ teaspoon strawberry essence ¼ cup confectioners' sugar (icing), sifted, plus more for dusting ¾ cup Maida ¼ cup strawberry custard powder, sifted	Use an electric mixer to combine the butter, vanilla extract, strawberry essence and sifted confectioners' sugar in a large bowl until pale and fluffy. Sift together the plain flour and strawberry custard powder into a separate bowl. Add the flour mixture to the butter mixture, and beat on low speed until just combined, making sure to scrape down the bowl. Roll teaspoonfuls of dough into balls.Place on the lined tray about 1" apart—cookies will expand slightly in the oven. Use the end of a fork to press down lightly on top of each ball. Bake using the programme cookies. Remove from oven and stand 5 minutes in tray before transferring to a wire rack to cool completely.

Sr.no	COOKIES	INGREDIENTS	METHOD
83	Eggless melting moments	100 gm (3/4 cup) plain flour 30 gm (2 tbsp) cornflour 60 gm (1/2 cup) icing sugar 100 gm (1/2 cup) butter 2 tbsp milk (optional) 1 tsp vanilla extract	Sieve the flour and the cornflour together into a bowl. In another bowl mix in the butter and the sugar with a hand blender or a wire whisk or put in the stand mixer with the paddle attachment and blend until smooth and creamy.Put in the flour mixture and vanilla extract and mix until smooth and there are no lumps. Add egg and mix well.Empty the contents in piping bag and pipe it onto a parchment paper as per desired shape . Bake using the programme cookies.
84	Red velvet melting moments	125g unsalted butter 80gmsicing sugar 40gms cornflour ¼ cup cocoa powder 140gms Maida 1 tbsp red food colouring	Beat butter and sifted icing sugar with an electric mixer in a small bowl for 3 minutes, or until mixture is light and fluffy. Gradually add remaining dry ingredients, continuously beating on medium speed until all is combined. Mix in the food colouring. Spoon mixture into a piping bag fitted with a 1cm fluted tube. Pipe rosettes onto baking trays. Alternatively, roll teaspoons of dough and press down onto baking trays with a fork. Bake using the programme cookies. . Cool on tray for 5 minutes, then turn onto a wire rack to cool completely.
85	Spicy Melting moments	125g butter 60g icing sugar 2 teaspoons mixed spice 110g Maida 30g cornflour	Sift in the other ingredients and stir to combine. At this stage, the mixture can be wrapped in plastic wrap and kept in the fridge for up to a week. Make balls by rolling between floured palms, place on baking tray, then press down with a fork until 1cm thick. Bake using the programme cookies. Cool on tray for 5 minutes, then turn onto a wire rack to cool completely.
86	Melting moments cornflakes Coated	100 g butter 75 g caster sugar 1 egg yolk few drops of vanilla flavouring 150 g Self raising flour crushed cornflakes	Cream the butter and sugar together until pale and fluffy. Beat in the egg yolk. Add the vanilla flavouring, stir in the flour to give a smooth dough and divide into about 24 portions. Form each piece into a ball and roll in crushed cornflakes. Bake using the programme cookies. Cool on tray for 5 minutes, then turn onto a wire rack to cool completely.

Sr.no	BARBECUE	INGREDIENTS	METHOD
Cookware : Baking plate			
87	Chicken Satay	8 skinless chicken thighs, cut into thin strips 1 package wooden skewers SATAY MARINADE: 1/4 cup minced lemongrass , fresh or frozen 1 small onion, sliced 3 cloves garlic 2 fresh red chilies, sliced, 1 thumb-size piece of ginger-thinly sliced 1/2 tsp. dried turmeric 2 Tbsp. ground coriander 2 tsp. cumin 3 Tbsp. dark soy sauce 4 Tbsp. fish sauce 5Tbsp. brown sugar 2 Tbsp. vegetable oil	Use wooden skewers, soak them in water (to prevent burning). Cut chicken into thin strips and place in a bowl. Place all marinade ingredients in a food processor or chopper. Process well. Mix in chicen pieces in marinade. Allow at least 1 hour for marinating, or longer (up to 24 hours). When ready to cook, thread meat onto the skewers. Grill the satay selecting barbecue option
88	Boneless Chicken Tikka	Chicken cubes Crushed Ginger-1 tsp Crushed garlic-2 cloves Lemon juice, Turmeric -1/2 tsp Chilli powder-1 tsp Curry powder-1/4 tsp Hung curd-2/3rd cup Garam masala -1/4 tsp Coriander -1/4 tsp Corn starch-1/4 tsp Oil ,Salt-as per taste	Mix all the ingredients together and let the chicken marinate for 3-4 hours. Put the chicken onto the baking plate and use the menu barbecue to cook. Turn over the chicken tikka inbetween the programme.
89	Chicken Sausage	Defrost -Frozen chicken sausage	Spread chicken sausages on baking tray and cook by using barbecue programme. Brush oil halfway during the programme.
90	Chicken Nuggets	Defrost -Frozen chicken Nuggets	Spread chicken nuggets on baking tray, and cook by using barbecue programme. Brush oil halfway during the programme.

Sr.no	BARBECUE	INGREDIENTS	METHOD
91	Chicken Keema Kebab	500 gms Boiled chicken keema (marinated with ginger garlic /turmeric/lemon juice of 1 lime) 1/2 cup besan, Ingredients to be ground to paste: 1/2 teaspoon poppy seeds-roasted, 4 cloves garlic, 1 teaspoon garam masala, 1 teaspoon black cumin seeds roasted 1 tablespoon coriander seeds roasted, 1 teaspoon grated green ginger ; salt to taste; 2 green chilies (chopped), 1 large onion-finely chopped, 2 large eggs, 3 tablespoons chopped green coriander, 3 tablespoons bread crumbs.	Mix boiled keema along with ½ cup besan, poppy seeds, garlic cloves, garam masala, black cumin, coriander seeds. Add the chillies and onion and mix well. Add one egg over the mince and add the chopped coriander and mix thoroughly. Divide the mixture into 16 portions. First roll each one into a ball and then flatten into a fat round disc. Dip each kabab in the beaten egg and then roll it over the bread crumbs.place the kebab on baking plate . Cook kebab by selecting the menu barbecue .Serve with garnishing and chutney of your choice.
92	Prawn Satay	12 raw king prawns, Vegetable oil - for frying **For the marinade** 5 tablespoons soy sauce 2 tablespoons lemon juice 2 cloves garlic, crushed 1 tablespoon fresh coriander-chopped, pinch red chilli powder	In a bowl, combine the soy sauce, lemon juice, garlic, coriander and chilli. Add the peeled prawns, stir well and refrigerate 1 hour. Meanwhile soak wooden TURN GRILLs, in water (to prevent burning). Thread prawns onto the skewers and barbecue by placing them on baking plate.Turn over midway during the programme. Serve with satay Sauce
93	Minced Fish Satay	2-3 shallots 5 cloves garlic 1 oz fresh ginger 2 Tbs. turmeric 1-2 stalks lemon grass 1/2 tsp red chili powder 3 bay leaves (kaffir leaves if available) 4 mackerel, steamed and minced with fork. 3 Tbsp. fried onion 1 tbsp lemon juice 1 Tbs. palm sugar (or dark brown sugar) 1 Tbs shrimp paste 2 Tbs. thick coconut milk	Blend the shallots, garlic, fresh ginger, turmeric, lemon grass, red chili, and bay leaves paste. Mix together with fish, fried shallots, lemon leaves, palm sugar, and shrimp paste. Add coconut milk a little at time to make a mixture that will hold together on the skewer. Shape mixture on skewers and barbecue

Sr.no	BARBECUE	INGREDIENTS	METHOD
94	Chicken Popcorn	Defrost -Frozen chicken popcorns	Spread chicken popcorns on baking tray and cook by using barbecue programme. Brush oil halfway during the programme.
95	Chicken Patty For Burgers	Defrost -Frozen chicken patty for burgers	Spread chicken patty on baking tray, and cook by using barbecue programme. Brush oil halfway during the programme.
96	Hara Chicken Kebab	200 gm boneless chicken breast 1 1/2 tablespoon thick curd 2 teaspoon lemon juice 1 cup coriander leaves 1/4 cup mint leaves 1-1/2 inch ginger piece 6-8 cloves garlic 4-5 green chilies thinly chopped 1/2 teaspoon red chilli powder 1/4 teaspoon turmeric powder 2 teaspoon coriander powder 1-1/2 teaspoon garam masala powder 1 teaspoon butter 2 tablespoon cooking oil Salt to taste Bamboo skewer stick/sathey sticks to grill	Wash the chicken breast and cut into medium size chunks. Apply salt, butter, lemon juice and red chilli powder on the chicken pieces and keep aside for 10-15 minutes. In the meantime, coriander-mint leaves, ginger, garlic and green chilies. Grind into a smooth paste. Now add curd and spices in ground paste of leaves and coat the chicken pieces very well in it. Cover the marinated chicken and keep it aside at least for 20 minutes, so that chicken gets the aroma and flavors of green paste and spices. Soak the wooden skewers in normal water for about 4-5 minutes. Apply some oil on the skewers and arrange the pieces of chicken onto the skewers. Spread some more oil on top of the chicken pieces. cook by selecting barbecue programme.
97	Lamb Koftas	500gms lamb mince 1 small onion chopped 2 garlic cloves crushed ½ tsp red chilli powder 1tbsp chopped mint leaves ½ tsp ground ginger 1tsp ground jeera ½ tsp ground coriander	Place mince, onion, garlic, chilli powder, , ginger, cumin and coriander in a bowl. Mix to combine. Shape 1/4 cup lamb mixture at a time into sixteen 8cm-long sausages. Thread 1 sausage onto each skewer. Place on a large baking tray. Cover. Refrigerate for 20 minutes or until firm. Place the koftas on baking plate and cook by selecting barbecue programme.

Sr.no	BARBECUE	INGREDIENTS	METHOD
98	Pineapple Chicken Satay	1/4 cup lower-sodium soy sauce 1/4 cup sweet chili sauce 1/4 cup natural-style, crunchy peanut butter 2 teaspoons peanut oil 1/2 teaspoon curry powder 1 pound chicken breast tenders, cut lengthwise into 8 pieces Cooking spray 1 1/2 cups diced pineapple 1/3 cup vertically sliced red onion 2 tablespoons chopped fresh cilantro 2 tablespoons fresh lime juice 1/8 teaspoon ground red pepper	Place peanut oil, curry powder, and chicken in a bowl; toss to coat. Thread chicken onto 8 (6-inch) skewers. Place on baking plate. Cook by selecting barbecue programme. While chicken cooks, combine 1 1/2 cups pineapple, 1/3 cup red onion, 2 tablespoons cilantro, 2 tablespoons lime juice, and 1/8 teaspoon ground red pepper. Serve chicken with soy sauce mixture and pineapple mixture.
99	Grilled Garlic & Herb Chicken Satay	1 bottle Garlic & Herb Marinade 3 tablespoons chunky peanut butter 1 tablespoon brown sugar 1 tablespoon water 1/8 teaspoon ground cumin 1/8 teaspoon ground red pepper 500gms boneless, skinless chicken, cut into strips	Combine 1/3 cup marinade with peanut butter, brown sugar, water and spices; whisk together and reserve. Combine chicken strips with remaining marinade; marinate for 30 minutes or up to 1 hour. Remove meat from marinade and thread onto 8 skewers. Place on baking plate. Cook by selecting the programme Barbecue.
100	Mango & Coconut Chicken Skewers	500 gboneless, skinless chicken breasts (about 4) 125 mL- mango chutney 1 tbsp freshly squeezed lime juice 1 tsp curry paste or powder 250 mL-unsweetened shredded coconut 125 mL- plain yogurt 1 tbsp mango chutney	Cut each chicken breast lengthwise into – in. (1 cm) thick slices. Thread onto skewers. In large shallow dish, combine chutney, lime juice and curry paste. Place skewers in dish, spread to coat with chutney mixture. (Can be covered and refrigerated for up to 1 day). Spread coconut in a separate shallow dish. Lightly roll chicken in coconut, shaking off excess coconut , place chicken on baking plate and cook by selecting the programme Barbecue. Yogurt Dip: In a small dish, stir together yogurt and chutney. Cover and refrigerate until serving, for up to one day. Bring just to room temperature before serving.
101	Marinated Chicken Brochette	500 g of boneless chicken breasts cut in strips or beef (I use sirloin) cut in 1 inch (2.5 cm) cubes 1/2 cup (120 ml) of vegetable oil 1/2 cup (120 ml) of soy sauce 2tbsp crushed mustard 1/4 cup (60 ml) of lemon juice 2 tbsp of Worcestershire sauce 1 large garlic clove, finely chopped 1 tsp of freshly ground black pepper	Use wooden skewers, soak them in water (to prevent burning). Place the soy sauce, lemon juice, mustard, Worcestershire sauce, garlic and pepper in a blender and mix well slowly adding the oil; Pour the marinade over the chicken and let sit for 4 hours, turning occasionally. When you are ready to cook, Thread the chicken on wooden skewers and cook by selecting barbecue programme.

AIR-FRY : AF

Recipe code	Recipe Name	Weight Range	Utensils	Ingredients & Cooking Method		
AF:03	Crunchy Chicken	0.380 Kg.	Low rack/Tawa	Ingredients		
				chicken breasts –wash and pat dry .chill in the freezer for 20 minutes, Cut lengthwise into thin 1/2" broad, long stripes	2nos	
				Marinade		
				olive oil	1-2 tbsp	
				balsamic vinegar	1-2 tbsp	
				Ginger garlic paste	1tbsp	
				mustard paste	1tbsp	
				tomato ketchup	1tsp	
				salt and pepper	1/4th tsp each	
				For Coating-Egg white & bread Crumbs	As required	
				Cooking Method 1 Mix all ingredients of the marinade in a bowl. 2 Marinade chicken stripes in the marinade .keep covered in the refrigerator for 1-2 hours or overnight in fridge. 3 Dip the chicken fingers in egg white and coat with dry bread crumbs. 4 Place low rack on the glass turntable. Keep tawa on the low rack. Select the program and press START. 2 Upon beep, Place chicken coated with		

				bread crumbs on hot tawa, replace it in the microwave and press START. 3. Upon beep, turn the chicken stripes upside down and press START. 4.Serve hot.

Recipe Code	Recipe Name	Weight Range	Utensils	Ingredients and Cooking Method		
AF:04	French Fries	0.200 Kg	Low rack/Tawa	Ingredients		
				Instant French Fries	200 g	
				Oil	2 tsp	
				Cooking Method 1 Place low rack on the glass turntable. Keep oil greased tawa on the low rack. Select the program and press START. 2 Upon beep, Place instant French fries on the greased tawa and brush with oil, and press START. 3 Sprinkle with salt and serve hot.		

Recipe Code	Recipe Name	Weight Range	Utensils	Ingredients and Cooking Method		
AF:05	Omelet	0.150 Kg	Tawa /Low rack	Ingredients		
				Eggs	2	
				Onion (Chopped)	1	
				Tomato (Chopped)	1tbsp	
				Milk	1 tbsp	
				Salt and Pepper	As required	
				Oil	1 tsp	
				oregano	1tsp	
				Chilli flakes	1tsp	
				Grated Paneer	2tbsp	
				Coriander Leaves	1tbsp	

				Cooking Method 1 Beat the eggs, mix the chopped onions, tomatoes, green chillies, coriander, salt, pepper, milk, oregano, chilli flakes, grated paneer and mix well. 2 Place low rack on the glass turntable. Keep oil greased tawa on the low rack. Select the program and press START. 3 Upon beep, Pour the egg mixture on tawa, spread it well and press START. 4 Upon beep, turn over the omelet on the tawa , place tawa on the low rack and press START.

Recipe Code	Recipe Name	Weight Range	Utensils	Ingredients and Cooking Method		
AF:06	Stuffed Paratha	0.120 Kg	Tawa /High rack	Ingredients	120 g	
				Maida	1 cup	
				Paneer (shredded)	4tbsp	
				Coriander Leaves	1tsp	
				Jeera powder	1tsp	
				Garlic powder	1tsp	
				Garam masala	1/2 tsp	
				Salt	As per taste	
				Olive oil	2tsp	
				Cooking Method 1 Mix the flour, oil & water into a soft dough. 2 For preparing Stuffing:Mix together mashed potato,paneer,coriander,jeera,garlic,garam masala and salt. Roll out a portion of the dough into 4'' diameter. Place portion of stuffing at the centre and bring the edges together at the centre to seal tightly. Roll out again into a circle of 6'' diameter. 3 Place high rack on the glass turntable. Keep oil greased tawa on the high rack.		

				Place the paratha on tawa, and press START. 4 Upon beep, flip the paratha upside down on the tawa and press START 5 Serve hot.

Recipe code	Recipe Name	Weight Range	Utensils	Ingredients & Cooking Method		
AF:07	Chicken Nuggets (ready to cook)	0.3Kg.	Tawa / Low rack	Ingredients		
				Chicken Nuggets	300 gms.	
				Oil	1 tbsp	
				Cooking Method : 1 Place tawa on low rack in microwave oven. Select the menu and press START. 3 Upon beep place the Nuggets. Brush them with oil and press START 4 Serve Hot.		

Recipe code	Recipe Name	Weight Range	Utensils	Ingredients & Cooking Method		
AF:08	Smiles (ready to cook)	0.300kg.	Tawa/low rack	Ingredients		
				Instant Smiles	12 pieces	
				Oil	1 tsp	
				Cooking Method 1 Place oil greased tawa on low rack in microwave oven. Select the menu and press START. 3 Upon beep, place the smiles on the tawa, brush with oil and press START. 4 Sprinkle with salt and serve hot.		

Recipe code	Recipe Name	Weight Range	Utensils	Ingredients & Cooking Method		
AF:09	Dosa	60ml per dosa	Tawa/high rack	Ingredients		
				Dosa batter (room temp)	240ml	
				Oil	4 tsp	

				Cooking Method 1 Place oil greased tawa on high rack in microwave oven. Select the menu and press START. 2 Upon beep, pour & spread dosa batter on the tawa and press START. 3. Upon beep remove dosa, keep the high rack along with the oil greased tawa in the mwo and press START to preheat tawa.repeat step 2 ***Note:*** You can make 3 dosa by repeating step 3 & Step 2. After first dosa (60ml), the display will show countdown for 10 seconds, open and close the door within the 10 seconds, the system will auto automatic switchover to dosa 2(60ml) and the display will show total cooking time. Press START/QUICK START to start. In this way, the END is displayed directly until cooking to dosa 4(60ml).

Recipe code	Recipe Name	Weight Range	Utensils	Ingredients & Cooking Method		
AF:10	Parmesan Cauliflower Bites	0.270Kg.	Borosil bowl/Low rack/Tawa	Ingredients		
				Bread Crumbs	1Cup	
				Parmesan Cheese	¾ cup	
				Cauliflower Florets	270 cups	
				All purpose flour	½ cup	
				Egg	2no.	
				Paprika, garlic powder,black pepper powder,Onion powder,Oregano and thyme	½ tsp each	
				Salt	To taste	
				Cooking Method 1 Place the borosil bowl with cauliflower florets in microwave oven. Select the menu and press START. 2 In a large bowl, combine breadcrumbs, Parmesan cheese, paprika, garlic powder, black pepper powder, onion powder, oregano, salt and thyme. 3 working in batches, Dredge cauliflower in flour, dip into eggs, and dredge in bread		

				crumbs mixture, pressing to coat. 4 Arrange cauliflower on oil greased tawa, keep it on low rack in microwave oven and press START. 5 Upon beep, turn over the cauliflower, grease with oil and press START. 6 Serve hot

Recipe code	Recipe Name	Weight Range	Utensils	Ingredients & Cooking Method		
AF:11	Fish tandoor	0.250Kg.	High rack/Tawa	Ingredients	Wt 250gm	
				Pomfret	250gms	
				Lemon juice	1tbsp	
				Coriander (fresh leaves)	50gms	
				Green chilli chopped	4nos	
				Garlic	8 flakes	
				Kashmiri Chilli Powder	1tsp	
				Besan flour	1tsp	
				Mustard Oil	4tbsp	
				Tandoori Food Color	A pinch	
				Salt	As per taste	
				Cooking Method 1 Marinade fish with salt and lemon juice for 5 minutes. 2 Grind green chilli, coriander & garlic to fine paste. 3 Apply spice paste to fish and let it marinate for 10 minutes. 4 Place high rack on the glass turntable. Arrange fish on the tawa. Place tawa on high rack. 5 Select the program and Press START. 6 When beep , Turn over fish and press START 7 Serve hot.		

Recipe	Recipe Name	Weight Range	Utensils	Ingredients & Cooking Method

code						
AF:12	Bati	0.350 Kg.	Low rack + Tawa	Ingredients		
				Wheat flour	300 gms.	
				Gram flour	50 gms.	
				Makai ka atta	50 gms.	
				Salt	As per your taste	
				Water	As required	
				Ghee	1 cup	
				Cooking Method 1 Mix the different flours together with as much water as required. Make round balls of 50–60 g each of the dough. Press them slightly to create bati shape. 2 Place the tawa on the low rack, keep it in microwave oven. 3 Select the program and press START. 4 After preheat, place the bati on tawa and press START. 5 Upon beep, Brush ghee on bati, turn it upside down, and press START. 6 Serve bati with dal.		

Recipe code	Recipe Name	Weight Range	Utensils	Ingredients & Cooking Method		
AF:13	Paneer Oats Tikki	0.360Kg.	Low rack/Tawa	Ingredients	250gms	
				Oats (grind to powder)	1cup	
				Brown bread crumbs	¼ cup	
				Grated carrots	½ cup	
				Grated Paneer	100gms	
				Boiled potato (boiled & mashed coarsely)	1cup	
				Mint leaves powder	1tsp	
				Green chillies (chopped)	2-3nos	
				Grated ginger	1 tsp	
				Coriander leaves	½ cup	
				Chat masala	1tsp	
				Red chilli powder	1tsp	

				Ajwain seeds	1 tsp	
				curd	As required	
				Salt	To taste	
				Oil	1tbsp	
				Cooking Method 1 Mix together coriander leaves, mint leaves powder , ginger, green chilles , mashed potatoes, ground oats, grated carrot, grated paneer ,green chillies chopped,chat masala,chilly powder and ajwain seeds. 2 Add curd to bind the ingredients together.Add salt as per taste. 3 Lightly wet hands and make 12 tikkis from this mixture. 4 Place low rack on the glass turntable. Keep oil greased tawa on the low rack. Select the menu and press START. (to preheat tawa) 5 Upon beep, Place Paneer Oats Tikki on the tawa, brush with oil and press START. 6 Upon beep, turn the tikki upside down and press START. 7 Serve hot with green chutney.		

Recipe code	Recipe Name	Weight Range	Utensils	Ingredients & Cooking Method		
AF:14	Toast Exotica	0.250Kg	Tawa / Low rack	Ingredients		
				Bread Slices (sliced)	2	
				Sandwich spread	1tsp	
				Butter	1 Tsp	
				Paneer-grated	100 gms	
				Green lettuce leaves chopped -(dip in chilled water overnight and pat dry	2	
				Small tomato	1no.	
				Salt and pepper	to taste	
				Mustard sauce	To taste	
				Black olives(sliced)	Few slices	
				Cheddar cheese	1/4 cup	

				Cooking Method : 1 Apply butter to the bread, followed by sandwich spread , spread grated paneer, arrange tomato slices, top tomatoes with mustard and then arrange olive slices. Grate Cheese. 2 Place low rack on the glass turntable. Keep tawa on the low rack. 3 Select the menu and press START. (To preheat tawa. 4 Place Toast Exotica on the hot tawa and press START. 5 Sprinkle salt & pepper, chopped lettuce leaves on toast exotica before serving.

Recipe Code	Recipe Name	Weight Range	Utensils	Ingredients and Cooking Method		
AF:15	Potato wedges (Ready to fry)	0.420 Kg	Tawa /Low rack	Ingredients		
				Potato wedges (Ready to fry)	420gms	
				Oil	1tbsp	
				Cooking Method 1 Place low rack on the glass turntable. Keep oil greased tawa on the low rack. Select the program and press START. (to preheat tawa) 2 Upon beep, Place Ready to fry Potato wedges on the tawa, brush them with oil and press START. 3 Upon beep, serve hot.		

Recipe Code	Recipe Name	Weight Range	Utensils	Ingredients and Cooking Method		
AF:16	Besan Chilla	0.150Kg	Tawa /Low rack	Ingredients		
				Besan flour	1cup	
				Onion(finely chopped)	¼ cup	
				Tomatoes (finely chopped)	¼ cup	

				Chopped ginger	½ tsp	
				Chopped green chilies	½ tsp	
				Chopped coriander leaves	1 tbsp	
				Salt	To taste	
				Turmeric powder	¼ tsp	
				Red chili powder	¼ tsp	
				Cooking Method 1Prepare besan chilla batter by mixing all the ingredients with ½ cup water. Add tbsp of water each time to form smooth flowing batter. 2. Place low rack on the glass turntable. Keep oil greased tawa on the low rack. Select the program and press START. (to preheat tawa) 3 Upon beep, Spread batter on the tawa, and press START. 3 Upon beep, serve hot.		

Recipe Code	Recipe Name	Weight Range	Utensils	Ingredients and Cooking Method		
AF:17	Crunchy Paneer	0.350 Kg	Tawa /Low rack	Ingredients		
				Paneer, Cut lengthwise, long stripes as per individual choice	300gms	
				Ingredients for marinade		
				Curd	3tbsp	
				Ginger garlic paste	1tsp	
				Milk	1 tbsp	
				Chilli Powder	½ tsp	
				Garam masala	½ tsp	

				Black pepper powder	¼ tsp	
				Salt	1tsp	
				Cornflour	2tbsp	
				Dry bread crumbs: **For coating**	100 gms	
				Cooking Method 1 Mix all ingredients of the marinade in a bowl.Marinade Paneer stripes in the marinade .Coat the Paneer fingers with dry bread crumbs. 2 Place low rack on the glass turntable. Keep oil greased tawa on the low rack. Select the menu and press START. (to preheat tawa) 3 Upon beep, Place the Paneer on tawa and press START. 4. Upon beep, flip the paneer stripes upside down and press START. 5 Upon beep, serve hot.		

Recipe Code	**Recipe Name**	**Weight Range**	**Utensils**	**Ingredients and Cooking Method**		
AF:18	Patrani Machi	0.270 Kg	Tawa /Low rack	Ingredients		
				Bhetki fish fillet (wash and drain water)	250gms	
				Salt	¼ tsp	
				Lemon juice	1tbsp	
				Marinade 2		
				Coconut grated	½ cup	
				Coriander	50gms	
				Green chillies chopped	5-6 nos	
				Black mustard paste	2tbsp	
				Kashmiri chilli powder	1/2tsp	

				Mustard oil	3tbsp	
				Salt	To taste	
				Banana leaves :**for covering fish**	Wash and wipe clean with a soft clean cloth.	
				Cooking Method 1 Marinade fish with salt and lemon juice for 10 minutes. 2 Mix all the ingredients of marinade 2 and mix in fish fillet. 3 Wrap one piece of fish fillet to banana leaf. 4 Bush oil on the patrani machi. 5 Place low rack on the glass turntable. Keep oil greased tawa on the low rack. Select the program and press START. (to preheat tawa) 6 Upon beep, Place banana leaf wrap fish on the tawa and press START. 7 Upon beep, serve hot.		

Recipe Code	Recipe Name	Weight Range	Utensils	Ingredients and Cooking Method		
AF:19	Veg. Fingers (Ready to fry)	0.250 Kg	Tawa /Low rack	Ingredients		
				Veg. Fingers (Ready to fry)	250gms	
				Oil	1tbsp	
				Cooking Method 1 Place low rack on the glass turntable. Keep oil greased tawa on the low rack. Select the program and press START. (to preheat tawa) 2 Upon beep, Place Ready to fry Veg. fingers on the tawa, brush veg. fingers with oil and press START. 3 Upon beep, serve hot.		

Recipe Code	Recipe Name	Weight Range	Utensils	Ingredients and Cooking Method		
AF:20	Veg. Nuggets	0.325 Kg	Low rack/Tawa	Ingredients		
				Instant Veg	325 g	

				Nuggets		
				Oil	1 tsp	
				Cooking Method 1 Place low rack on the glass turntable. Keep oil greased tawa on the low rack. Select the menu and press START. (to preheat tawa) 2 Upon beep, Place instant Veg nuggets on the greased tawa and brush with oil, and press START. 3 Serve hot.		

Recipe Code	Recipe Name	Weight Range	Utensils	Ingredients and Cooking Method		
AF:21	Samosas (Ready to fry)	0.250 Kg	Tawa /Low rack	Ingredients		
				Samosas (Ready to fry)	250gms	
				Oil	1tbsp	
				Cooking Method 1 Place low rack on the glass turntable. Keep oil greased tawa on the low rack. Select the program and press START. (to preheat tawa) 2 Upon beep, Place Ready to fry samosas on the tawa, brush the samosas with oil and press START. 3 Upon beep, serve hot.		

Recipe Code	Recipe Name	Weight Range	Utensils	Ingredients and Cooking Method		
AF:22	Chicken Fry (Boneless)	0.230 Kg	Tawa/low rack	**Ingredients**		
				Chicken cubes	230 g	
				Curds	4tbsp	
				Lemon Juice	1 tsp	
				Salt	To taste	
				Red Chilli Powder	1 tsp	
				Ginger-Garlic Paste	2 tbsp	

				Cornflour	1 tbsp	
				Chopped Coriander	2 tbsp	
				Dry Fenugreek Leaves	2 tsp	
				Paprika	1tsp	
				Lemon slices	To serve	
				Cooking Method 1 In a bowl, mix the yogurt, ginger-garlic paste, lemon juice, salt, red chilli powder, coriander, fenugreek leaves ,paprika and cornflour .Marinate the chicken cubes with all these ingredients and put it in refrigerator for half an hour. 2 Place the tawa on the low rack. Select the menu and press START. 3 Upon beep, place the chicken cubes on the tawa , brush with oil and press START. 4 Upon beep, turn over the chicken pieces and press START. Serve hot with lemon slices.		

Recipe code	Recipe Name	Weight Range	Utensils	Ingredients & Cooking Method		
AF:23	Beetroot Rolls	0.450Kg.	Low rack/Tawa	Ingredients		
				Boiled and mashed potato	1no.	
				Beetroot boiled and grated	1no.	
				boiled carrot	1 small	
				Onion Chopped	1no	
				Cumin powder	1tsp	
				Salt	To taste	
				Garam masala	1 tsp	
				Chaat masala	1tsp	
				Lemon juice	1tsp	
				Bread crumbs	2 tbsp.	
				Oil	1 tbsp	
				Cooking Method 1 Add onion , grated carrot, beetroot , Cumin powder,garam masala,lemon juice,salt,chaat masala and mashed potato.. Mix thoroughly to bind the ingredients together.		

				2 Take a portion of the mixture, and roll it to give desired shape. 3 Roll them in bread crumbs to coat them properly. 4 Place low rack on the glass turntable. Keep oil greased tawa on the low rack. Select the menu and press START. (to preheat tawa) 5 Upon beep, Place beetroot rolls on the tawa, and press START. 6 Upon beep, Flip the beetroot rolls upside down on the tawa, and press START. 7 Upon beep, serve hot.

Recipe Code	Recipe Name	Weight Range	Utensils	Ingredients and Cooking Method		
AF:24	Veg. Spring Rolls (Ready to fry)	0.330 Kg	Tawa /Low rack	Ingredients		
				Veg Spring Rolls (Ready to fry)	330gms	
				Oil	1tbsp	
				Cooking Method 1 Place low rack on the glass turntable. Keep oil greased tawa on the low rack. Select the menu and press START. (to preheat tawa) 2 Upon beep, Place Ready to fry veg Spring rolls on the tawa, and press START. 3 Upon beep, serve hot.		

Recipe Code	Recipe Name	Weight Range	Utensils	Ingredients and Cooking Method		
AF:25	Aloo Tikki (Ready to fry)	0.200 Kg	Tawa /Low rack	Ingredients		
				Aloo Tikki (Ready to fry)	200gms	
				Oil	1tbsp	
				Cooking Method 1 Place low rack on the glass turntable. Keep oil greased tawa on the low rack. Select the menu and press START. (to preheat tawa) 2 Upon beep, Place Ready to fry aloo tikki on the tawa, and press START. 3 Upon beep, serve hot.		

Recipe Code	Recipe Name	Weight Range	Utensils	Ingredients and Cooking Method		
AF:26	Achaari Bhindi	0.200Kg	Tawa /Low rack	Ingredients		
				Lady Fingers (Ready to fry)	200gms	
				Chilli powder	½ tsp	
				Salt	To taste	
				Chat masala	1tbsp	
				Turmeric powder	¼ tsp	
				Amchur powder	½ tsp	
				Oil	1tbsp	
				Cooking Method 1Mix together chilli powder, salt, chat masala,turmeric powder and amchur powder 2Wash bhindi and dry it with clean kitchen cloth. Separate the ladyfingers lengthwise into 2 pieces. Apply the spice mix to bhindi.Mix in oil. 3Place low rack on the glass turntable. Keep oil greased tawa on the low rack. Select the menu and press START (to preheat tawa). 4 Upon beep, Place spiced lady fingers on the tawa, and press START. 5 Upon beep, serve hot.		

AUTO COOK

For the following food or cooking mode, it is not necessary to program the duration and cooking power. It is sufficient to indicate the type of food that you wish to cook as well as the weight or servings of this food.

1. In standby mode, press the corresponding menu button once or repeatedly to select food weight or servings.
2. Press START/EXPRESS COOK button to start.

Auto cook menus:

Food	Note
Beverages (200 ml/cup, 1-3 cups)	1. For Beverages and Cookies, the display screen will not show the icon "g". 2. For cookies, need to preheat at 160℃ with convection before cooking. 3. The result of auto cook depends on factors such as the shape and size of food, your personal preference as to the doneness of certain foods and even how well you happen to place food in the oven. If you find the result at any rate not quite satisfactory, please adjust the cooking time a little bit accordingly.
Popcorn (100 g)	
Rice (150 - 600 g)	
Cake (475 g)	
Pizza (150 g, 300 g, 450 g)	
Cookies (press once, only one choice, fully covered.)	
Barbecue (100 - 500 g)	

KEEP WARM

1. In standby mode, press KEEP WARM/FERMENT button once.
2. Use number buttons button to set desired time. The longest time is 99 minutes and 99 seconds.
3. Press START/EXPRESS COOK button to confirm.

NOTE: The default time is 30 minutes. For default time, omit the step 2.

FERMENTATION

1. In standby mode, press KEEP WARM/FERMENT button twice.
2. Use number buttons button to set desired time. The longest time is 99 minutes and 99 seconds.
3. Press START/EXPRESS COOK button to confirm.

NOTE: The default time is 30 minutes. For default time, omit the step 2.

STEAM CLEAN

Put a bowl of 100 ml water into the oven.

1. In standby mode, press HYGIENE+ button once.
2. Press START/EXPRESS COOK button to start. Wipe the microwave oven cavity after the program ends

NOTE: The cleaning time is 5 minutes.

DEODORIZATION

1. In standby mode, press HYGIENE+ button twice.
2. Press START/EXPRESS COOK button to start.

NOTE: The deodorization time is 5 minutes.

DISINFECTION

1. In standby mode, press HYGIENE+ button 3 times.
2. Press START/EXPRESS COOK button to start.

NOTE: The disinfection time is 1 minute.

POWER SAVE

To set: In standby mode, press POWER SAVE button once, the display screen will go out. The oven will enter power saving mode.

To cancel: In the power saving mode, the power saving function can be cancelled by opening the door or pressing any button.

CHILD LOCK

The lock prevents unsupervised operation by children.

To set: In standby mode, press and hold STOP/RESET button for 3 seconds, a beep will sound and the display screen will show "Loc", the oven will auto enter child lock mode. In the lock state, all buttons are disabled.

To cancel: Press and hold STOP/RESET button for 3 seconds to cancel the program, a beep will sound and the "Loc" will disappear.

PROTECTION

OVERHEATING PROTECTION - When the system enters into super high temperature protection status, the digital display shows "E01" and continues to beep. After troubleshooting, press STOP/RESET button, the system comes back to normal standby mode.

LOW TEMPERATURE PROTECTION - When the system enters into low temperature protection status, the digital display shows "E02" and continues to beep. After pressing STOP/RESET button, the system comes back to normal standby mode.

SENSOR MALFUNCTION PROTECTION - The system enters into protection mode when the system sensor is short circuited. The display shows "E03" and continues to beep. After pressing STOP/RESET button, the system comes back to normal standby mode.

Button adhesion protection

In any state, if any button on the control panel is adhesion for 1 minute, the program stops working immediately, the display shows "FAIL" and the system will sound beep. If the button is adhesion all the time, beep will sound every one minute. Any button is invalid at this time. After troubleshooting, press STOP/RESET button to return standby mode.

Cooling feature

This system of the microwave oven has the feature of cooling .As for any cooking mode which cooking time above 2 minutes， after finishing cooking ， the oven fan will work about 3 minutes automatically to cool the oven for prolonging the life of the oven.

Standardized Vanilla Sponge Cake Recipe

For 1kg cake tin (9 to 11 inch round cake tin)

Ingredients:

08 eggs (yolks and whites separated)
220 gms powdered sugar
280 gms plain refined flour
40 ml milk
60 gms oil
1 tspBaking soda
1 tsp Baking powder
1tbp vanilla essence

Apparatus needed:

02 mixing bowl glass
01 rubber spatula
01 sheet of butter paper
01 electric whisk
01 weighing scale
01 tooth pick

Instruction:

1. Separate the egg yolks and egg whites in separate glass bowls. Ensure no egg yolk falls in white.
2. Beat oil and powdered sugar with an electric whisk till it forms a crumbly mixture. Now separately beat egg whites with an electric whisk till the egg white are stiffly beaten . Add the sugar and oil mixture to the beaten egg white in 05 parts and whisk it.
3. Slowly add the 4 egg yolks and give it a light mix (fold in). Sieve refined flour with baking powder and baking soda , and gradually add this in 3 parts till all the flour is mixed (use rubber spatula to cut and fold mixture).
4. Pre-heat the oven on convection mode at 170C. Add the milk, and vanilla essence to the cake batter. Line the cake tin with butter paper (ensure the edge for side butter paper lining are 2 cm above the rim of cake tin to give more space for the cake to rise. Now grease the lined butter paper mildly with oil.

5. After the oven pre-heats, Transfer the batter in the lined cake tin, tap the cake tin and swirl with tooth pick to release trapped air-pockets. Place the cake tin on the glass turn table directly.
6. Bake on convection mode for 170C for 45 mins. Fold a foil paper to make it double layer and place it above the cake after first 10 mins ensuring the foil paper is not touching the cavity sides. De-mould once cooled on metal rack.
7. Decorate the cake as required.

(**Tip :** While baking use “Low rack” for evenly cooked cake bottom and spongy cake).

Standard operation procedure (SOP) for baking 500 gms Vanilla sponge cake (with egg).

Ingredients:

1. 04 eggs (yolks and whites separated)
2. 120 gms castor sugar or powdered sugar
3. 120 gms plain refined flour
4. 40 gms milk
5. 30 gms oil
6. 1 tsp synthetic vinegar
7. 1/2 tsp vanilla essence

Apparatus needed:

01 mixing bowl glass
01 rubber spatula
01 sheet of butter paper
01 electric whisk

Instruction:

1. Beat the egg whites with an electronic whisk till the egg whites become stiff peaks. Add the vinegar to the egg white and whisk it. Add the castor sugar in 5 separate parts and whisk till all the sugar is dissolved in the egg whites.
2. Slowly add the 4 egg yolks and give it a light mix (fold in). Add the refined flour in 3 parts till all the flour is mixed (use cut and fold method).

3. Pre-heat the oven on convection mode for 10 minutes at 170C. Add the oil, milk, and vanilla essence to the cake batter.
4. Coat the cake tin with butter and flour or butter paper and butter. After the oven pre-heat, set the oven on convection mode for 150C for 35 mins.
5. Transfer the batter in the lined cake tin, tap the cake tin and swirl with tooth pick to release trapped air-pockets.
6. Bake on convection mode for 150C for 35 mins. De-mould once cooled on metal rack.
7. Decorate the cake as required.

Special Note :

1. De -mould the cake only after cake is 100% cooled and on room temperature.
2. Always carry a pre-baked sponge cake to explain cake textures and even demonstrated icing.

CLEANING AND CARE

1. Turn off the oven and unplug the power cord from the wall when cleaning.
2. Keep the inside of the oven clean. When food splatters or spilled liquids adhere to oven walls, wipe with a damp cloth. Mild detergents may be used if the oven gets very dirty. Avoid using spray or other harsh cleaners. They may stain, streak or dull the door surface.
3. The outside of the oven should be cleaned with a damp cloth. To prevent damage to the operating parts inside the oven, water should not be allowed to seep into the ventilation openings.
4. Wipe the door and window on both sides, the door seals and adjacent parts frequently with a damp cloth to remove any spills or spatters. Do not use abrasive cleaner.
5. A steam cleaner is not be used.
6. Do not allow the control panel to become wet. Clean with a soft, damp cloth. When cleaning the control panel, leave oven door open to prevent oven from accidentally turning on.
7. If steam accumulates inside or around the outside of the oven door, wipe with a soft cloth. This may occur when the microwave oven is operated under high humidity condition. And it is normal.
8. It is occasionally necessary to remove the glass tray for cleaning. Wash the tray in warm sudsy water or in a dishwasher.
9. The roller ring and oven floor should be cleaned regularly to avoid excessive noise. Simply wipe the bottom surface of the oven with mild detergent. The roller ring may be washed in mild, soapy water or in a dishwasher. When removing the roller ring, be sure to replace it in the proper position.
10. Remove odors from your oven by combining a cup of water with the juice and skin of one lemon in a microwaveable bowl. Microwave for 5 minutes. Wipe thoroughly and dry with a soft cloth.
11. If the light bulb burns out, please contact customer service to have it replaced.
12. The oven should be cleaned regularly and any food deposits should be removed. Failure to maintain the oven in a clean condition could lead to deterioration of surface that could adversely affect the life of the unit and could possibly result in a hazardous situation.
13. Please do not dispose of this appliance into the domestic rubbish bin; it should be disposed to the particular disposal center provided by the municipalities.
14. When the microwave oven with grill function is first used, it may produce slight smoke and smell. This is a normal phenomenon, because the oven is made of a steel plate coated with lubricating oil, and the new oven will produce fumes and odor generated by burning the lubricating oil. This phenomenon will disappear after a period of using.

The user manual can also be check and download from our website: https://www.ifbappliances.com/

ABOUT E-WASTE

E-waste or Electronic Waste or Waste Electrical and Electronic Equipment (WEEE) are the terms used to describe old, end-of-life or discarded appliances which are operated using electricity.

Do's and don'ts for customers

Do's

- Always dispose of products that have reached end-of-life by calling an Authorized local E-waste Recycler.
- Always drop off your used/discarded or end-of-life electronic products, batteries or any accessories at your nearest Authorized E-Waste Recycler or E-waste collection center.
- Wherever possible or as instructed, separate the packaging material according to responsible waste disposal and recycling options.
- Check with your nearest dealer or electronic showroom if any scheme is available with return of old and end-of-life electronic item.

Don'ts

- Do not dismantle your electronic products on your own.
- Do not throw electronics in bins having "Do Not Dispose" sign.
- Do not give E-waste to informal and unorganized sectors like Local Scrap Dealer and Rag Pickers.
- Do not dispose off your product in garbage bins along with municipal waste that ultimately reaches landfills.

Risks of improper handling of E-waste

E-waste usually includes components which if disposed off improperly hold adverse environmental consequences such as air, water, and soil pollution and also pose risks to human health. By ensuring this product is disposed off correctly, you will help prevent potential negative consequences for the environment and human health.

Components and materials used in the manufacture of this product are RoHS compliant.

For detailed information and disposal request

Please visit our website https://www.ifbappliances.com/e-waste or Contact IFB Care at 080 458 45678 and provide your details to our representative to raise a request for product to be picked up for recycling and safe disposal.

WARRANTY

IFB Industries Limited. ("The Company") warrants to the original domestic purchase of this Microwave oven ("Appliances") that it is free from defects in workmanship & materials. During 12 months from the date of purchase of the new microwave oven model,all the parts of the microwave oven and 36 months magnetron & cavity, shall be replaced or repaired free of charge, on intimation to the Company I Company's authorized service centre nearest to the place where the appliance is installed
This warranty is subject to Limitations of Warranty.

1.This warranty is not valid in case of the following events.

a) If the warranty card is not fully and properly filled in and signed at the time of purchase I installation by the company's authorised dealer I service engineer.

b) If the completed warranty card is not presented to the authorised personnel at the time of service I repair.

c) If the appliance is not used in accordance with manufacturer's instructions given in the Operating Manual.

d) If the appliance has been serviced, repaired, opened or tampered by any unauthorized personnel.

e) If defects arise caused by accidents, alteration, misuse, neglect, abuse, substitution of original components with spurious I non-genuine components, attack by household pests I rodents, fire, flood, earth-quake, lightning and I or any other acts of God natural calamities.

f) If damages occur by improper electrical, circuit outside the appliance or by any defective electrical supply thereof.

g) If the machine serial number on the appliance is defaced, missing or altered.

h) If the appliance is taken out of India.

2. This warranty does not cover any type of painting, plating including rusting etc or defects thereof.

3. This warranty does not cover normal wear and tear of parts.

4. Liability for consequential damages is neither accepted nor implied.

5. Parts replaced or repaired under this warranty are warranted throughout the remaining of the original warranty period.

6. Company is not liable for any delay in servicing due to reasons beyond the control of the company or any of its authorised service center.

7. This warranty is not applicable, if the built in oven is used for commercial purpose of at places like Institutions, Hotels, Hostels, Hospitals, Community Halls and other similar applications.

8. For any service under this warranty beyond city , town ,municipal limits from the Company , authorized service centre, a fixed charge of Rs. 250 /- will be collected from the customer in addition to the actual to and fro charges by the shortest route. Alternatively the customer can bring the appliance to the nearest service centre for carrying out the necessary repairs, at customer's own cost.

9. During the warranty period whenever the appliance is shifted from the original city of purchase to another city , town where service is provided by the company's authorized service agent, a warranty transfer charge of Rs. 300 /- will be collected from the customer by the company’s authorized service agent. The above charges also include the reinstallation of the appliance. However in case of transfer to a city where the company provides direct service, a nominal charge of Rs. 250 /- only will be collected from the customer towards reinstallation. The Company, however, shall not undertake the responsibility of shifting I transferring the appliance from the location where the appliance was originally installed.

10. This warranty is issued subject to the jurisdiction of Kolkata courts, and I or other judicial/ quasi judicial forums having jurisdiction over the registered office of the Company.

Note: For all types of repairs I maintenance under warranty, the appliance shall be brought to the nearest **Company service centre or its authorised service agent.**

CUSTOMER COPY

Mr./Mrs./Ms -
Address - - - - - - - - - - - - - - - - - - -

IFB Industries Limited
Regd. off.: 14 Taratala Road
Kolkata – 700088