Dishwasher

Neptune BI

User Manual

IFB

www.ifbappliances.com

Read Instructions before switching on the Dishwasher.
Observe the safety guidelines for installation.

Thank you for choosing this product.

This User Manual contains important information on safety and instructions intended to assist you in the operation and maintenance of your appliance.

Please take the time to read this User Manual before using your appliance and keep this book for future reference.

Icon	Type	Meaning
	WARNING	Serious injury or death risk
	RISK OF ELECTRIC SHOCK	Dangerous voltage risk
	SYMBOL ISO 7010 W021	Warning; Risk of fire / flammable materials
	CAUTION	Injury or property damage risk
	IMPORTANT / NOTE	Operating the system correctly

CONTENTS

1.SAFETY INSTRUCTIONS 1
1.1. General Safety Warnings 1
1.2. Installation Warnings 1
1.3. During Use 2
2.INSTALLATION 6
2.1. Machine Positioning 6
2.2. Water Connection 6
2.3. Water Inlet Hose 6
2.4. Drain Hose 6
2.5. Electrical Connection 7
3.TECHNICAL SPECIFICATIONS 8
3.1. General Appearance 8
3.2. Technical Specifications 8
4.BEFORE USING THE APPLIANCE 9
4.1. Preparing your Dishwasher for first use 9
4.2. Fill the Salt 9
4.3. Test Strip 10
4.4. Water Hardness Table 10
4.5. Water Softener System 10
4.6. Setting 10
4.7. Detergent Usege 10
4.8. Filling the Detergent 11
4.9. Using Combined Detergents 11
4.10. Rinse-aid Usege 11
4.11. Filling the Rinse-aid and Setting 11
5.LOADING YOUR DISHWASHER 13
5.1. Recommendations 13
5.2. Alternative Basket Loads 16
6.PROGRAMME TABLE 17
7.THE CONTROL PANEL 18
7.1. Changing a Programme 19
7.2. Cancelling a Programme 19
7.3. Switching the Machine Off 19

8.CLEANING AND MAINTENANCE 21
8.1. Cleaning the Machine and Filters 21
8.2. Spray Arms 21
9.TROUBLESHOOTING 23
10.PRACTICAL INFORMATION 26

1. SAFETY INSTRUCTIONS

1.1. General Safety Warnings

- Read these instructions carefully before using your appliance and keep this manual for future reference.

⚠Please check the packaging of your machine before installation and the outer surface of the machine once the packaging has been removed. Do not operate the machine if it appears damaged or if the packaging has been opened.

- Packaging materials protect your machine from any damage that might occur during transportation. The packaging materials are environmentally friendly as they are recyclable. Use of recycled material reduces raw material consumption and decreases waste production.

⚠This appliance can be used by children aged from 8 years and above, and by persons with reduced physical, sensory or mental capabilities or lack of experience and knowledge if they have been given supervision or instruction concerning the use of the appliance in a safe way and understand hazards involved. Children should not be allowed to play with the appliance.

⚠Remove packaging and keep it out of reach of children.

⚠Keep children away from detergents and rinse aids.

⚠There may be some residue left in the machine after washing. Keep children away from the machine when it is open.

1.2. Installation Warnings

- Choose a suitable and safe place to install your machine.
- Only original spare parts should be used with the machine.

⚠⚠Unplug the machine before installation.

⚠Your machine must only be installed by an authorised service agent. Installation by anyone other than an authorised agent may cause your warranty to be void.

⚠Check that the indoor electrical fuse system is connected in line with safety regulations.

⚠All electrical connections must match the values on the plate.

⚠⚠Ensure the machine does not stand on the electrical supply cable.

⚠Never use an extension cord or a multiple socket connection.

⚠The plug should be accessible after the machine is installed.

- After installation, run your machine unloaded for the first time.

⚠⚠The machine must not be plugged in during positioning.

⚠Always use the coated plug supplied with your machine.

⚠⚠If the electrical cable is damaged, it should only be replaced by a qualified electrician.

1.3. During Usege

- This machine is for domestic use only; do not use

- it for other purposes. Commercial use will void the guarantee.

⚠Do not stand, sit or place loads on the open door of the dishwasher.

⚠Only use detergents and rinse aids produced specifically for dishwashers. Our company is not responsible for any damage that may occur due to misuse.

⚠Do not drink water from the machine.

⚠Due to the danger of explosion, do not place any chemical dissolving agents into the machine's washing section.

- Check the heat-resistance of plastic items before washing them in the machine.

⚠Only put items in the machine which are suitable for dishwashing, and take care not to overfill the baskets.

⚠Do not open the door while the machine is in operation, hot water may spill out. Safety devices ensure the machine stops if the door is opened.

⚠The machine door should not be left open. It may cause accidents.

⚠Place knives and other sharp objects in the cutlery basket in a blade-down position.

⚠⚠For models with the automatic door-opening system, when the EnergySave option is active, the door will open at the end of a program. To prevent damage to your dishwasher, do not attempt to close the door for one minute after it has opened. For effective drying, keep the door open for 30 minutes after a programme has ended. Do not stand in front of the door after the auto-open signal sounds.

⚠In the case of a malfunction, repair should only

be performed by an authorised service company, otherwise the warranty will be void.

⚠⚠Before repair work, the machine should be disconnected from the mains. Do not pull the cable to unplug the machine. Switch off the water tap.

Operation at a low voltage will cause a decline in performance levels.

⚠For safety, disconnect the plug once a program has finished.

⚠To avoid an electric shock, do not unplug the machine with wet hands.

⚠⚠Pull the plug to disconnect the machine from the mains, never pull on the cord.

About E-waste

E-waste or Electronic Waste or Waste Electrical and Electronic Equipment (WEEE) are the terms used to describe old, end-of-life or discarded appliances which are operated using electricity.

Do's and don'ts for customers

Do's

- Always dispose of products that have reached end-of-life by calling an Authorized local E-waste Recycler.
- Always drop off your used/discarded or end-of-life electronic products, batteries or any accessories at your nearest Authorized E-Waste Recycler or E-waste collection center.
- Wherever possible or as instructed, separate the packaging material according to responsible waste disposal and recycling options.
- Check with your nearest dealer or electronic showroom if any scheme is available with return of old and end-of-life electronic item.

Don't

- Do not dismantle your electronic products on your own.
- Do not throw electronics in bins having "Do Not Dispose" sign.
- Do not give E-waste to informal and unorganized sectors like Local Scrap Dealer and Rag Pickers.
- Do not dispose off your product in garbage bins along with municipal waste that ultimately reaches landfills.

Risks of improper handling of E-waste

E-waste usually includes components which if disposed off improperly hold adverse environmental consequences such as air, water, and soil pollution and also pose risks to human health. By ensuring this product is disposed off correctly, you will help prevent potential negative consequences for the environment and human health.

Components and materials used in the manufacture of this product are RoHS compliant.

CE Declaration of Conformity

We declare that our products meet the applicable European Directives, Decisions and Regulations and the requirements listed in the standards referenced.

Packaging and Recycling

Packaging materials protect your machine from damage that may occur during transportation. The packaging materials are environmentally friendly as they are recyclable. The use of recycled material reduces raw material consumption and therefore decreases waste production. Plastics are marked with the international abbreviations (>PE<, >PP<, etc.). The cardboard parts consist of recycled paper. They can be put into waste paper containers for recycling.

For detailed information and disposal request

Please visit our website https://www.ifbappliances.com/e-waste or Contact IFB Care at 080 458 45678 and provide your details to our representative to raise a request for product to be picked up for recycling and safe disposal.

2. INSTALLATION

2.1. Machine positioning

When positioning the machine, place it in an area where dishes can be easily loaded and unloaded. Do not put the machine in an area where the ambient temperature falls below 0°C.

Read all warnings located on the packaging before removing the packaging and positioning the machine.

Place the machine close to a water tap and drain. Take into consideration that the connections will not be altered once the machine is in position.

Do not hold the machine by its door or panel.

Leave an adequate distance around the machine to allow ease of movement when cleaning.

Ensure the water inlet and outlet hoses are not squeezed or trapped and that the machine does not stand on the electrical cable while positioning.

Adjust the feet so the machine is level and balanced. The machine should be placed on flat ground otherwise it will be unstable and the door of the machine will not close properly.

2.2. Water connection

We recommend fitting a filter to your water inlet supply in order to prevent damage to your machine due to contamination (sand, rust, etc.) from indoor plumbing. This will also help prevent yellowing and deposit formation after washing.

Note printing on the water inlet hose!
If models are marked with 25°, the water temperature may be max. 25 °C (cold water).
For all other models:
Cold water preferred; hot water max. temperature 60 °C.

2.3. Water inlet hose

WARNING: Use the new water inlet hose supplied with your machine, do not use an old machine's hose.

WARNING: Run water through the new hose before connecting.

WARNING: Connect the hose directly to the water inlet tap. The pressure supplied by the tap should be a minimum of 0.03 MPa and a maximum of 1 MPa. If the pressure exceeds 1 MPa, a pressure relief valve must be fitted between the connection.

WARNING: After the connections are made, turn the tap on fully and check for water leaks. Always turn off the water inlet tap after a wash program has finished.

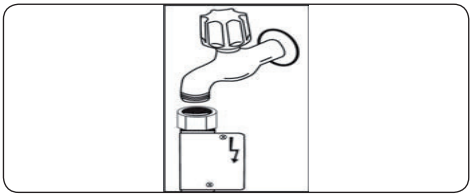

An Aquastop water spout is available with some models. Do not damage it or allow it to become kinked or twisted.

2.4. Drain Hose

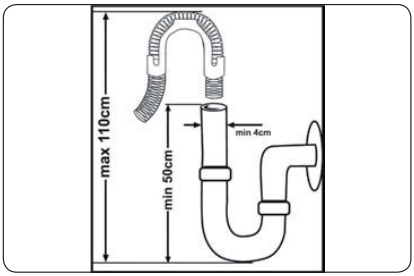

Connect the water drain hose directly to water drain hole or to the sink outlet spigot. This connection should be minimum 50 cm and maximum 110 cm from flor plane.

IMPORTANT: Items will not wash properly if a drain hose longer than 4 m is used.

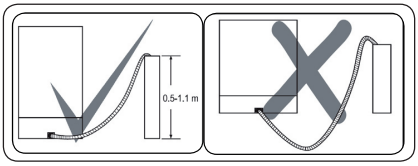

2.5. Electrical connection

WARNING: Your machine is set to operate at 220-240 V. If the mains voltage supply to your machine is 110 V, connect a transformer of 110/220 V and 3000 W between the electrical connection.

Connect the product to a grounded outlet protected by a fuse complying with the values in the "Technical Specifications" table".

The earthed plug of the machine must be connected to an earthed outlet supplied by suitable voltage and current.

In the absence of earthing installation, an authorised electrician should carry out an earthing installation. In the case of use without earthing installed, we will not be responsible for any loss of use that may occur.

The plug on this appliance may incorporate 13A fuse depending on the target country. (For Example UK, Saudi Arabia)

3. TECHNICAL SPECIFICATIONS

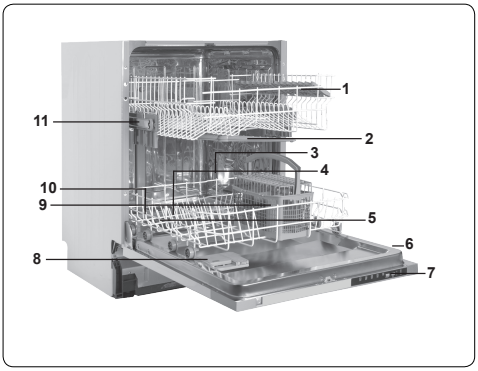

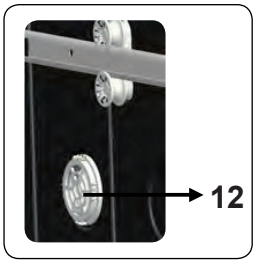

3.1. General appearance

1. Upper basket with racks
2. Upper spray arm
3. Lower basket
4. Lower spray arm
5. Filters
6. Rating plate
7. Control panel
8. Detergent and rinse-aid dispenser
9. Cutlery basket
10. Salt dispenser
11. Upper basket track latch
12. Active Drying Unit: This system provides better drying performance for your dishes.

3.2. Technical specifications

Capacity	12 place settings
Dimensions (mm) Height Width Depth	 820-870(mm) 598(mm) 550(mm)
Net weight	38 kg
Operating voltage / frequency	220-240V 50 Hz,
Total current (A)	10(A)
Total power (W)	1900(W)
Water supply pressure	Maximum: 1 (Mpa) Minimum: 0.03 (Mpa)

4. BEFORE USING THE APPLIANCE

4.1. Preparing your dishwasher for first use

- Make sure the electricity and supply water specifications match the values indicated in the installation instructions for the machine.
- Remove all packaging material inside the machine.
- Set the water softener level.
- Fill the rinse aid compartment.

4.2 Salt usage (IF AVAILABLE)

For a good washing function, the dishwasher needs soft, i.e. less calcareous water. Otherwise, White lime residues will remain on the dishes and the interior equipment. This will negatively affect your machine's washing, drying and shining performance. When water flows through the softener system, the ions forming the hardness are removed from the water and the water reaches the softness required to obtain the best washing result. Depending on the level of hardness of the inflowing water, these ions that harden the water accumulate rapidly inside the softener system. Therefore, the softener system has to be refreshed so that it operates with the same performance also during the next wash. For this purpose, dishwasher salt is used.

Machine can only be used by special dishwasher salt to soften the water. Do not use any small grained or powdered type of salts which can easily soluble. Using any other type of salt can damage your machine.

4.3. Fill the salt (IF AVAILABLE)

To add softener salt, open the salt compartment cap by turning it counter clockwise. **(1) (2)** At first use, fill the compartment with 1 kg salt and water **(3)** until it is almost overflowing. If available, using a funnel **(4)** will make filling easier. Replace the cap and close it. After every 20-30 Cycles add salt into your mach until it fills up (approx. 1 kg).

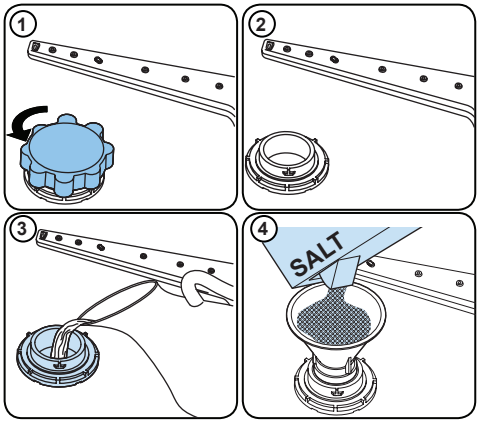

Only add water to the salt compartment on first use.

Use softener salt specifically produced for use in dishwashers.

When you start your dishwasher, the salt compartment is filled with water, therefore put the softener salt in prior to starting your machine.

If the softener salt has overflowed and you do not start the machine immediately, run a short washing program to protect your machine against corrosion.

4.4. Test Strip

Run water through the tap (1min.)	Keep the strip in the water (1sec)	Shake the strip.	Wait (1min.)	Set the hardness level of your machine.
	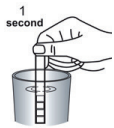	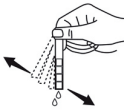	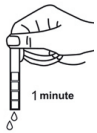	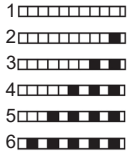

NOTE: The level is set to 3 as default. If the water is well water or has a hardness level above 90 dF, we recommend that you use filter and refinement devices.

4.5. Water Hardness Table

Level	German dH	British dE	French dF	PPM	Indicator
1	0-5	0-6	0-9	0-90	L1 is shown on the display.
2	6-11	7-14	10-20	100-200	L2 is shown on the display.
3	12-17	15-21	21-30	210-300	L3 is shown on the display.
4	18-22	22-28	31-40	310-400	L4 is shown on the display.
5	23-31	29-39	41-55	410-550	L5 is shown on the display.
6	32-39	40-49	56-70	560-700	L6 is shown on the display.

4.6. Water Softener System

The dishwasher is equipped with a water softener which reduces the hardness in the mains water supply. To find out the hardness level of your tap water, contact your water company or use a test strip (if available).

4.7. Setting

In order to change the salt level, follow the below steps:

- Open the door of the machine.
- Turn on the machine, and press the Programme button as soon as the machine is turned on.
- Hold down the Programme button until “SL” disappears.
- The machine will display the last setting.
- Set the level by pressing the Programme button.
- Turn off the machine to save the setting.

4.8. Detergent usage

Only use detergents specifically designed for domestic dishwashers. Keep your detergents in cool, dry places out of reach of children.

Add the proper detergent for the selected program to ensure the best performance. The amount of detergent needed depends on the cycle, load size, and soil level of dishes.

Do not fill detergent into the detergent compartment more than required; otherwise you can see whitish streaks or bluish layers on glass and dishes and may cause glass corrosion. Continued use of too much detergent may cause machine damage.

Using little detergent can result in poor cleaning and you can see whitish streaksin hard water.

See the detergent manufacturer's instructions for a further information.

4.9. Filling the detergent

Push the latch to open the dispenser and pour in the detergent.

Close the lid and press it until it locks in place. The dispenser should be refilled just before the start of each programme. If the dishes are heavily soiled, place additional detergent in the pre-wash detergent chamber.

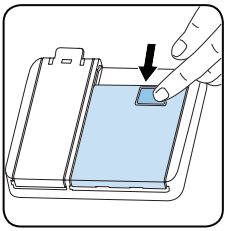

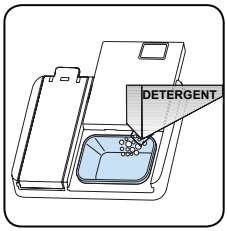

4.10. Using combined detergents

These products should be used according to the manufacturer's instructions.

Never put combined detergents into the interior section or the cutlery basket.

Combined detergents contain not only the detergent but also rinse-aid, salt replacement substances and additional components depending on the combination.

We recommend you do not use combined detergents in short programmes.
Please use powder detergents in such programmes.

If you encounter problems when using combined detergents, please contact the detergent manufacturer.

When you stop using combined detergents, make sure that water hardness and rinse aid settings are set to the correct level.

4.11. Rinse-aid usage

The rinse aid helps to dry the dishes without streaks and stains. Rinse-aid is required for stain-free utensils and clear glasses. The rinse aid is automatically released during the hot rinse phase. If rinse aid dosage setting set too low, whitish stains remains on dishes and dishes do not dry and washed clean.

If rinse aid dosage setting set too height,

you can see bluish layers
on glass and dishes.

4.12. Filling the rinse-aid and setting

To fill the rinse aid compartment, open the rinse-aid compartment cap. Fill the compartment with rinse aid to the MAX level and then close the cap. Be careful not to overfill the rinse aid compartment and wipe up any spills.

In order to change the rinse aid level, follow the below steps before turning on the machine:

- Open the door of the machine.
- Turn on the machine, and press the Programme button as soon as the machine is turned on.
- Hold down the Programme button until "rA" disappears. Rinse aid setting follows water hardness setting.
- The machine will display the last setting.
- Change the level by pressing the Programme button.
- Turn off the machine to save the setting.

The factory setting is "4".

If the dishes are not drying properly or are spotted, increase the level. If blue stains form on your dishes, decrease the level.

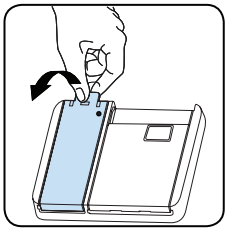

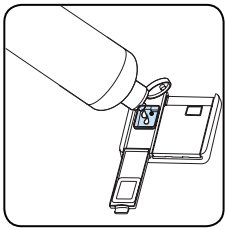

Level	Brightener Dose	Indicator
1	Rinse-aid not dispensed	r1 is shown on the display.
2	1 dose is dispensed	r2 is shown on the display.
3	2 doses are dispensed	r3 is shown on the display.
4	3 doses are dispensed	r4 is shown on the display.
5	4 doses are dispensed	r5 is shown on the display.

5. LOADING YOUR DISHWASHER

For best results, follow these loading guidelines.

Loading the household dishwasher up to the capacity indicated by the manufacturer will contribute to energy and water savings.

Manual pre-rinsing of tableware items leads to increased water and energy consumption and is not recommended You can place cups, glasses, stemware, small plates, bowls, etc. in upper basket. Do not lean long glasses against one another or they cannot remain steady and may receive damage.
When placing long stem glasses and goblets, lean them against the basket edge or rack and not against other items.

Place all containers such as cups, glasses and pots into the dishwasher with the opening facing downwards otherwise water can collect on items.

If there is cutlery basket in machine, you are recommended to use the cutlery grid in order to obtain the best result. Place all large (pots, pans, lids, plates, bowls etc.) and very dirty items in the lower rack.

Dishes and cutlery should not be placed above each other.

WARNING: Take care not to obstruct the rotation of spray arms.

WARNING: Make sure after loading the dishes do not prevent opening the detergent dispenser.

5.1. Recommendations

Remove any coarse residue on dishes before placing the dishes in the machine. Start the machine with full load.

Do not overload the drawers or place dishes in the wrong basket.

WARNING: To avoid any possible injuries, place long-handle and sharp-pointed knives with their sharp points facing down or horizontally on the baskets.

Upper Basket

The upper basket includes a mechanism which enables the height of the basket to be adjusted up **(1)** or down **(2)** without having to remove the basket. Hold the basket on both sides and pull it up or push it down, ensuring both sides of the upper basket are in the same position.

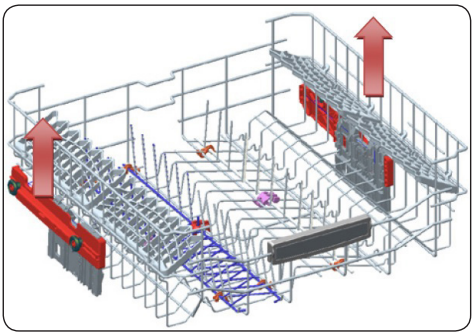

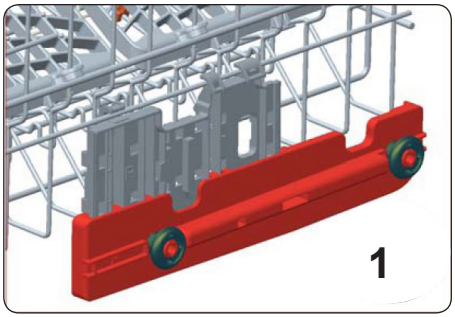

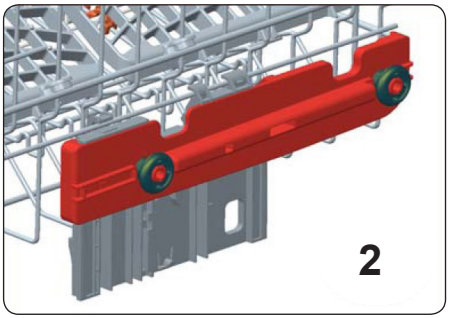

Height Adjustable Rack (peg type)

The height adjustable racks enable glasses and cups to be placed on or under the racks. The racks can be adjusted to 2 different heights. Cutlery and utensils can also be placed on the racks horizontally.

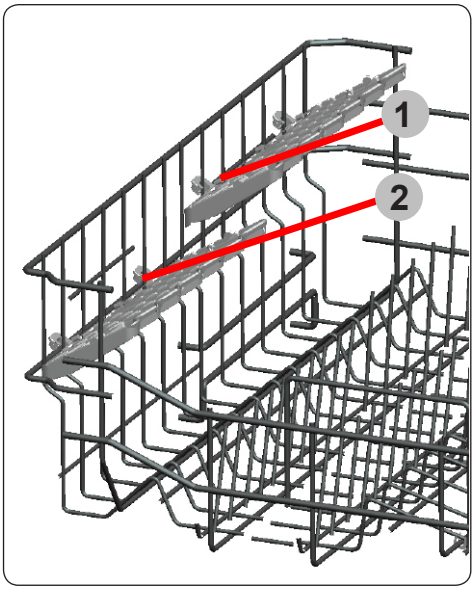

Height Adjustable Rack (peg type)

The foldable racks in the upper basket enable the placement of large items such as pots and pans. Each section can be folded separately. The foldable racks can be either raised up or folded down.

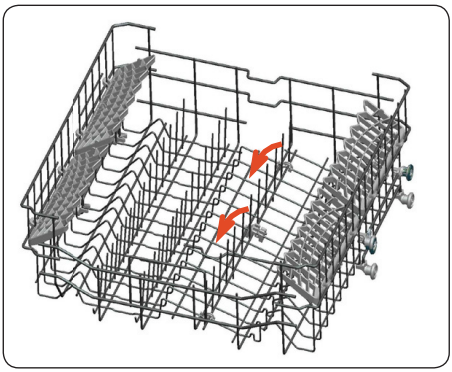

Four Folding Racks

The folding racks are designed so that large items, such as pots and pans, can be easily placed in the dishwasher. Each section can be folded separately. The racks can be folded down or raised up, as shown in the images below.

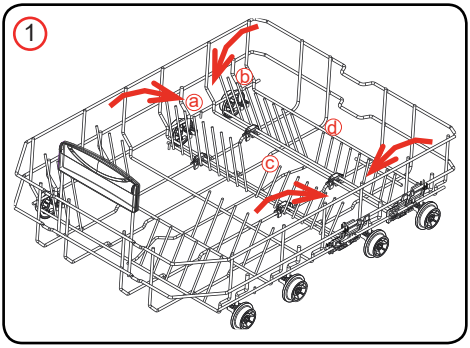

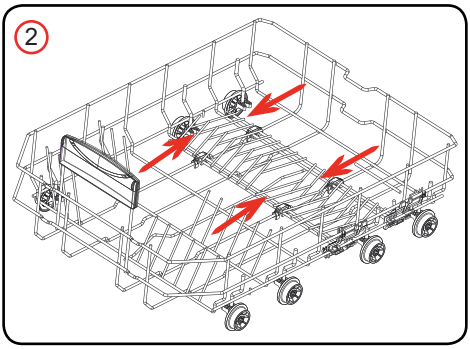

Multi-functional Rack System

Multi-functional rack system is located in the bottom basket of your machine. You can easily wash spare glasses or dishes like long ladles, bread knife with the help of this accesory.

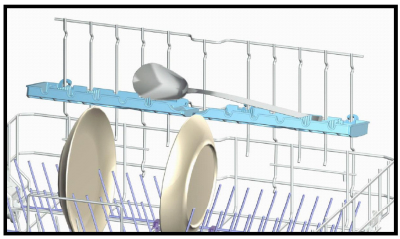

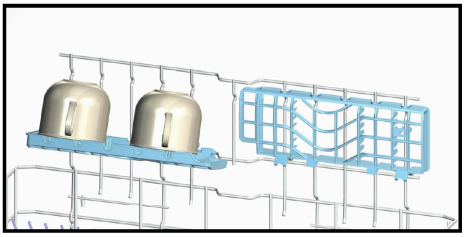

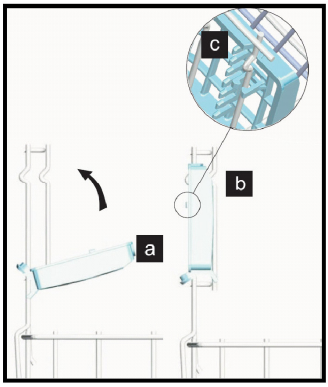

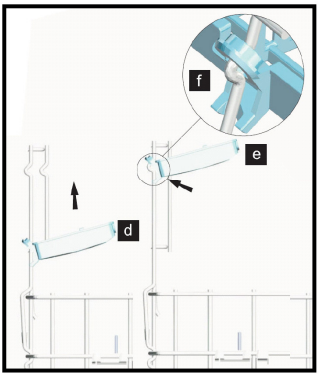

Please fold the racks by putting them from a position to b position, in order to put the racks in the multi-functional rack system into the closed position. Please make sure that claws on the rack are fit on the cord c. You can put the rack into the open position by following the steps in a reverse manner.

Your racks in the multi-purpose rack system has two positions: low position d and upper position e. This way you can attain larger space at the bottom part of your machine. Please put your racks into e position from d position to e , in order to put your racks to the upper position. Please fix the racks to their places f on the cord. Please make sure that the prop does not contact the dishes you put on the racks.

5.2. Alternative basket loads

Lower basket

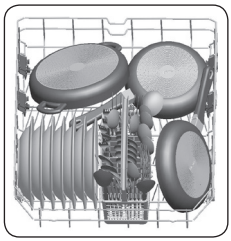

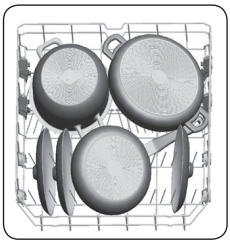

Upper basket

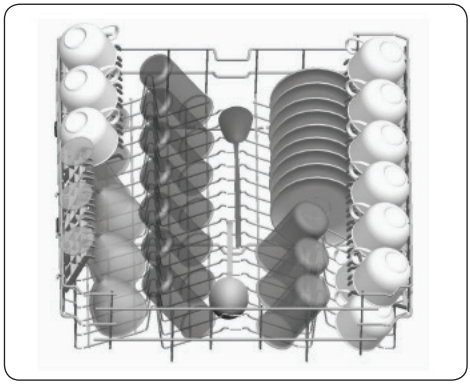

Incorrect Loads

Incorrect loading can cause poor washing and drying performance. Please follow the manufacturer's recommendations for a good performans result.

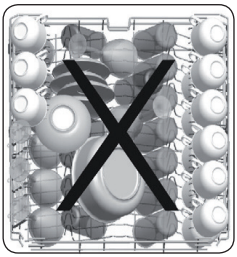

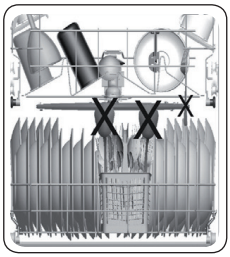

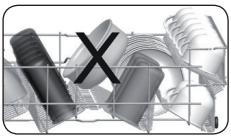

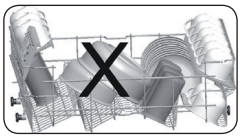

Unsuitable items for dishwashing

- Cigarette ashes, candle leftovers, polish, paint, chemical substances, iron-alloy materials.
- Forks, spoons and knives with wooden, bone, ivory or nacrecoated handles; glued items, items soiled with abrasive, acidic or base chemicals.
- Temperature-sensitive plastics, copper or tincoated containers.
- Aluminium and silver objects.
- Some delicate glasses, ornamental printed porcelains; some crystal items, adhered cutlery, lead crystal glasses, cutting boards, synthetic fibred items.
- Absorbent items such as sponges or kitchen rugs.

IMPORTANT: In future, purchase dishwasher-proof kitchenware.

Important Note for Test Laboratories

For detailed information required for tests according to EN normatives and a softcopy of the manual, please send the model name and serial number to the following address: **dishwasher@standardtest.info**

6. PROGRAMME TABLE

Programme		Duration (min)	Description
Eco		222	Standard program for normally soiled daily using dishes with reduced energy and water consumptions.
Smart 60°C - 70°C	Dirty	178	Auto program for heavily soiled dishes.
	Clean	97	
Smart 50°C - 60°C	Dirty	121	Auto program for normally soiled dishes.
	Clean	89	
Smart 30°C - 50°C	Dirty	92	Auto program for normally soiled delicate dishes.
	Clean	69	
Super 50' 65°C		50	Suitable for normally soiled daily dishes with faster program.
Easy Care 60°C		94	Suitable for normally soiled daily dishes.
Delicate 40°C		74	Suitable for lightly soiled delicate dishes.
Quick 30' 40°C		30	Suitable for lightly soiled dishes and quick wash.
Prewash		15	Suitable to rinse dishes that you plan to wash later.

NOTE: PROGRAMME DURATION MAY CHANGE ACCORDING TO THE AMOUNT OF DISHES, TAP WATER, AMBIENT TEMPERATURE AND SELECTED ADDITIONAL FUNCTIONS.

- Only use powder detergent in short programmes.
- Short programmes do not include a drying step.
- To assist drying, we recommend slightly opening the door after a cycle is complete.

7. THE CONTROL PANEL

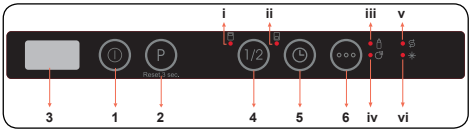

1. On/Off button

2. Program Selection Button

3. Display

4. Half Load Button

i. Upper Basket Half Load Led

ii. LowerBasket Half Load Led

5. Delay Button

6. Options Button

iii. Extra Hygiene Led

iv. Extra Dry Led

v. Salt Indicator

vi. Rinse Aid Indicator

1. On/Off Button

Switch the machine on by pressing On/ Off button. When machine is on, "--" will be shown on the Display (3).

2. Program Selection Button

Select a suitable programme by pressing the Program Selection button.

The programme will start automatically when the door is closed.

3. Display

The Display shows the number and total time of the selected programme alternately and the remaining time during operation.

4. Half Load Button

Press the Half Load button to select the area of the dishwasher containing dishes to be washed. You can select both baskets **(i,ii)**, the upper basket only **(i)**, or the lower basket only **(ii)**. Press the button until the light corresponding to the basket contaning the dishes to be washed illuminates. Dishes in other areas will not be washed. If a programme is incompatible with the Half Load function, a buzzer will sound.

5. Delay Button

Press the Delay button to delay the start time of the selected programme for 1 hour up to 19 hours. Pressing the button once delays the start time for 1 hour, and continuing to press will increase the delay time. Press the Delay button to change or cancel the delayed start time. If you switch off the machine while delay timer is active, the delayed time is cancelled.

6. Options Button

Press the Options button once to activate the Extra Hygiene option. When you activate it, Extra Hygiene led (iii) will illuminate so the washing temperature and duration changes on the selected programme, and it ensures a more hygienic wash.

Press the Options button twice to activate the Extra Dry option. When you activate it, Extra Dry led (iv) will illuminate and so extra heating/drying steps will be added to the selected programme.

Press the button a third time to deactivate the functions, both lights will switch off.

If an extra feature has been used on the most recent wash programme, this feature will remain active on the next selected programme. To cancel this feature on the newly selected wash programme, press the feature button until the light on the button switches off.

NOTE: If you decide not to start the selected programme, please see the "Changing a Programme" and "Cancelling a Programme" sections.

NOTE: When there is insufficient softening salt, the Salt Lack Warning Indicator **(v)** will illuminate to indicate the salt chamber needs filling.

NOTE: When there is insufficient rinse aid, the Rinse Aid Lack Warning Indicator **(vi)** will illuminate to indicate the rinse aid chamber needs filling.

7.1. Changing a Programme

Follow the steps below to change a programme while in operation.

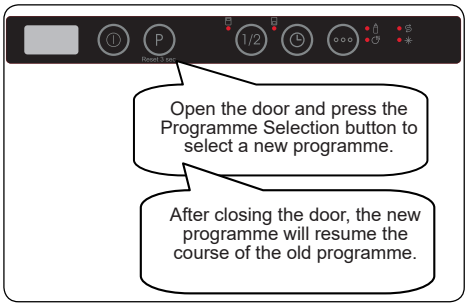

NOTE: Open the door slightly at first to stop a programme before it is complete in order to avoid water spillage.

7.2. Cancelling a Programme

Follow the steps below to cancel a programme while in operation.

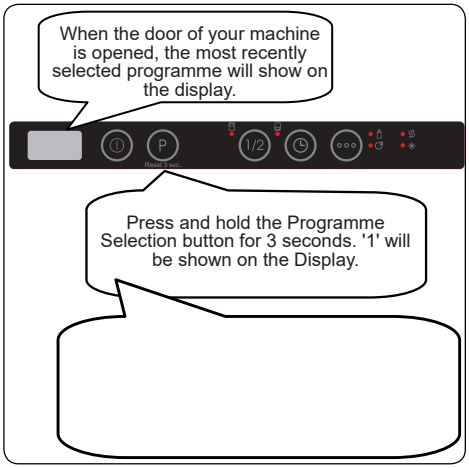

7.3. Switching the Machine Off

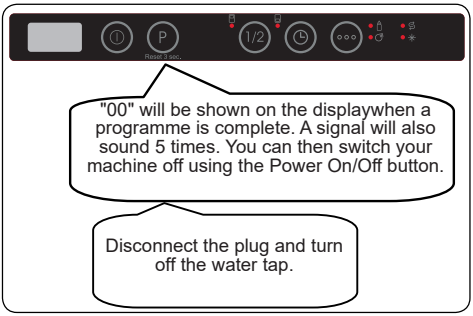

NOTE: If any button is not pressed on the ready state, the machine turns off automatically after 15 minutes.

NOTE: Do not open the door before a programme is complete.

NOTE: Leave the door slightly open at the end of a wash programme to speed up drying.

NOTE: If the door of the machine is opened or the power is cut during operation, the program will continue when the door is closed or the power returns.

Buzzer Sound Control

To change the buzzer sound level, follow the below steps:

1. Open the door and press Delay (5) And Options (6) buttons simultaneously for 3 seconds.
2. When sound setting is recognized, buzzer gives a long sound and machine will display last set level, from “S0” to “S3”.
3. To decrease sound level press Delay button (5). To increase sound level, press Options button (6).
4. To save the selected sound level, turn off the machine.’’S0’’ level means all voices are off. Factory setting is “S3”.

Save Power Mode

To activate or deactivate Save Power Mode, follow the below steps:

1. Open the door and press Half Load (4) and Delay (5) buttons simultaneously for 3 seconds.

2. After 3 seconds, the machine will display last Setting, “IL1” or “IL0”.

3. When Save Power Mode is activated,

“IL1” will be displayed. On this mode, interior lights will turn off 4 minutes after the door is opened, and the machine will turn off after 15 minutes of no activity in order to save energy.

4. When Save Power Mode is deactivated “IL0” will be displayed. If Save Power Mode is deactive, interior lights will be on as long as the door is open, and the machine will always be on unless it is turned off by user.

5. To save the selected setting, turn off the machine.

In factory setting, Save Power Mode is active.

Natural Ion Tech (Model Depending)

This function provides extra hygiene to the machine thanks to Ion Technology. Natural Ion Tech function is activated by pressing Half Load (4) button for 3 seconds. Meanwhile display counts from 1 to 3. At the end of 3 seconds, “Ion” will be displayed which indicates Natural Ion Tech function is activated. The button is released after “Ion” is displayed. If no intervention by user, 24 hour after activation of Natural Ion Tech function, it is automatically cancelled.

NOTE: If machine is turned off, Natural Ion Tech function is cancelled.

NOTE: Natural Ion Tech function does not work with any program.

NOTE: If Natural Ion Tech function is active, Natural Ion Tech led lights up like dimming during door is open.

Infoled 2.1 (Model Dependent)

LED Indicator	State of the Machine
Red, continuous	The machine is running a program.
Red, flashing	A program is cancelled.
Red, flashing rapidly	The machine has a fault. Refer to section **"Automatic fault warnings and what to do".**
Green, continuous	A program is finished.

8. CLEANING AND MAINTENANCE

Cleaning your dishwasher is important to maintain the machine's service life
Make sure that the water softening setting (If available) is done correctly and correct amount of detergent is used to prevent limescale accumulation. Refill the salt compartment when the salt sensor light comes on.

Oil and limescale may build up in your Dishwasher over time. If this occurs:

- Fill the detergent compartment but do not load any dishes. Select a programme which runs at high temperature and run the Dishwasher empty. If this does not clean your Dishwasher sufficiently, use a cleaning agent designed for use with dishwashers.
- To extend the life of your dishwasher, clean the appliance regularly on each month
- Wipe the door seals regularly with a damp cloth to remove any accumulated residue or foreign objects.

8.1. Filters

Clean the filters and spray arms at least once a week. If any food waste remains or foreign objects on the coarse and fine filters, remove them and clean them thoroughly with water.

a) Micro Filter **b)** Coarse Filter

c) Metal Filter

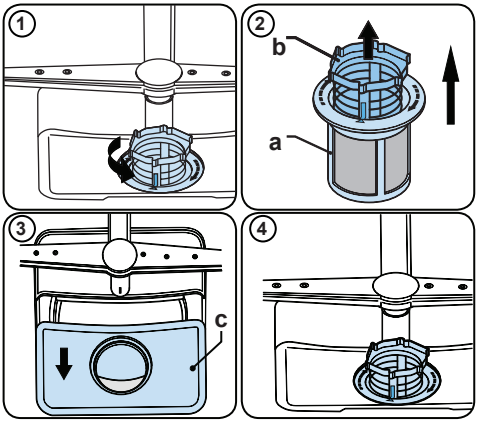

To remove and clean the filter combination, turn it counter clockwise and remove it by lifting it upwards **(1)**.Pull the coarse filter out of the micro filter **(2)**.Then pull and remove the metal filter **(3)**.Rinse the filter with lots of water until it is free of residue. Reassemble the filters. Replace the filter insert, and rotate it clockwise **(4)**.

- Never use your dishwasher without a filter.
- Incorrect fitting of the filter will reduce the washing effectiveness.
- Clean filters are necessary for proper running of the machine.

8.2. Spray arms

Make sure that the spray holes are not clogged and that no food waste or foreign object is stuck to the spray arms. If there is any clogging,remove the spray arms and clean them under water. To remove the upper spray arm undo the nut holding it in position by turning it clockwise and pulling it downwards. Make sure that the nut is properly tightened when refitting the upper spray arm.

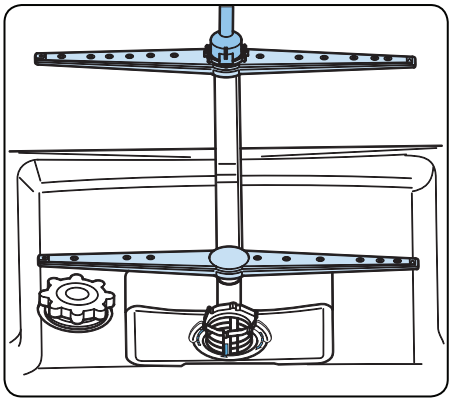

8.3 Drain Pump

Large food residues or foreign objects which were not captured by the filters may block the waste water pump. The rinsing water will then be above the filter.

⚠ Warning Risk of cuts!

When cleaning the waste water pump, ensure that you do not injure yourself on pieces of broken glass or pointed implements.

In this case:

1. First always disconnect the appliance from the power supply.

2. Take out baskets.

3. Remove the filters.

4. Scoop out water, use a sponge if required.

5.Check the area and remove any foreign objects.

6. Install filters.

7. Re-insert baskets.

9. TROUBLESHOOTING

FAULT	POSSIBLE CAUSE	TROUBLESHOOTING
The programme does not start.	Your Dishwasher is not plugged in.	Plug your Dishwasher in.
	Your Dishwasher is not switched on.	Switch your Dishwasher on by pressing the On/Off button.
	Fuse blown.	Check your indoor fuses.
	Water inlet tap is closed.	Turn on the water inlet tap.
	Your Dishwasher door is open.	Close the Dishwasher door.
	Water inlet hose and machine filters are clogged.	Check the water inlet hose and machine filters and make sure they are not clogged.
Water remains inside the machine.	Water drain hose is clogged or twisted.	Check the drain hose, then either clean or untwist it.
	The filters are clogged.	Clean the filters.
	The programme is not finished yet.	Wait until the programme is finished.
Machine stops during washing.	Power failure.	Check mains power.
	Water inlet failure.	Check water tap.
Shaking and hitting noises are heard during a wash operation.	The spray arm is hitting the dishes in the lower basket.	Move or remove items blocking the spray arm.
Partial food wastes remain on the dishes.	Dishes placed incorrectly, sprayed water not reaching affected dishes.	Do not overload baskets.
	Dishes leaning each another.	Place dishes as instructed in the section on loading your dishwasher.
	Not enough detergent used.	Use the correct amount of detergent, as instructed in the programme table.
	Wrong wash programme selected.	Use the information in the programme table to select the most appropriate programme.
	Spray arms clogged with food waste.	Clean the holes in the spray arms with thin objects.
	Filters or water drain pump clogged or filter misplaced.	Check the drain hose and filters are correctly fitted.

FAULT	POSSIBLE CAUSE	TROUBLESHOOTING
Whitish stains remains on dishes.	Not enough detergent used.	Use the correct amount of detergent, as instructed in the programme table.
	Rinse aid dosage and/or water softener setting set too low.	Increase rinse aid and/or water softener level.
	High water hardness level.	Increase water softerner level and add salt.
	Salt compartment cap not closed properly.	Check that the salt compartment cap is closed properly.
Dishes do not dry.	Drying option is not selected.	Select a programme with a drying option.
	Rinse aid dosage set too low.	Increase rinse aid dosage setting.
Rust stains form on the dishes.	Stainless-steel quality of the dishes is insufficient.	Use only dishwasher-proof sets.
	High level of salt in wash water.	Adjust the water hardness level using water hardness table.
	Salt compartment cap not closed properly.	Check that the salt compartment cap is closed properly.
	Too much salt spilled in the Dishwasher while filling it with salt.	Use funnel while filling salt to the compartment to avoid spillage.
	A poor mains grounding.	Consult a qualified electrician immediately.
Detergent remains in the detergent compartment.	Detergent was added when the detergent compartment was wet.	Make sure detergent compartment is dry before use.

AUTOMATIC FAULT WARNINGS AND WHAT TO DO

TROUBLE CODE	POSSIBLE FAULT	WHAT TO DO
FF	Water inlet system failure	Make sure the water inlet tap is open and water is flowing.
		Separate the inlet hose from the tap and clean the filter of the hose.
		Contact for service if the error continues.
F5	Pressure system failure	Contact for service.
F3	Continuous water input	Close the tap and contact for service.
F2	Inability to discharge water	Water discharge hose and filters may be clogged.
		Cancel the program.
		If the error continues, contact for service.
F8	Heater error	Contact for service.
F1	Overflow	Unplug the machine and close the tap.
		Contact for service.
FE	Faulty electronic card	Contact for service.
F7	Overheating	Contact for service.
F9	Diverter position error	Contact for service.
F6	Faulty heater sensor	Contact for service.
HI	High voltage failure	Contact for service.
LO	Low voltage failure	Contact for service.

The installation and repairing procedures should always carried out by the Authorised Service Agent in order to avoid possible risks. The manufacturer shall not be held liable for damages that may arise from procedures carried out by unauthorised persons. Repairs may be carried out by technicians only. If a component has to be replaced, ensure that only original spare parts are used.

Improper repairs or use of non-original spare parts may cause considerable damage and put the user at considerable risk.

Contact information for your customer service can be found on the back of this document.

Function-relevant genuine spare parts according to the corresponding Ecodesign order can be obtained from Customer Service for a period of at least 10 years from the date on which your appliance was placed on the market within the European Economic Area.

10. PRACTICAL INFORMATION

1. When the machine isn’t in operation:

- Disconnect the plug and close the tap.
- Leave the door slightly open to prevent odour formation.

2. Select the dry option to remove water droplets.

3. Place dishes in the machine properly to achieve the best energy consumption, washing and drying performance. Please see the programme and consumption table for more information.

4. Rinse dirty dishes before placing them in the dishwasher.

5. Only use the Prewash programme when necessary.

6. Do not place the machine near a refrigerator because it will reach high temperatures.

7. If the machine is located in an area that is at risk of freezing, close the tap, disconnect the inlet hose from the tap and drain the water inside the hose and the machine completely.

THE PRODUCT FICHE

Supplier's trade mark	IFB
Model name / identifier	Neptune BI
Rated capacity in standard place settings, for the standard cleaning cycle	12
Energy efficiency class A+++ (most efficient) to D (least efficient)	A++
Annual energy consumption (AE_c) (kWh/year)*	258
Energy consumption of the standard cleaning cycle (E_t) (kWh)	0,907
Weighted power consumption in off-mode (P_o) (W)	0,50
Power consumption in left-on mode (P_l) (W)	1,00
Weighted annual water consumption (AW_c) (Litres/year)**	2520
Drying efficiency class A (most efficient) to G (least efficient)	A
Standard programme to which the information in the label and the fiche relates***	Eco
Programme time for the standard cleaning cycle (min)	222
Duration of the left-on mode (T_l) (min)****	-
Airborne acoustical noise emissions (dB(A) re 1 pW)	52
Built-in	Yes

* Based on 280 standard cleaning cycles using cold water fill and the consumption of the low power modes. Actual energy consumption will depend on how the appliance is used..

** Based on 280 standard cleaning cycles. Actual water consumption will depend on how the appliance is used.

*** This programme is suitable to clean normally soiled tableware and is the most efficient programme in terms of combined energy and water consumption.

**** If the household dishwasher is equipped with a power management system.

CUSTOMER COPY

Mr./Mrs./Ms. _____

Address. _____

_____

Telephone No.: _____

Model Name: _____

Serial No.: _____

Date of Purchase: _____

Cash Memo No.: _____

Dealer Name and: _____

Address Stamp: _____

==========

Service Station Copy

Mr./Mrs./Ms _____
First Name Middle Name Last Name

Address: _____

_____

Pin Code: _____

Telephone No.: (R) _____ (O) _____

E-mail Address: _____

Model Name: _____

Serial No.: _____

Date of Purchase: _____

Cash Memo No.: _____

Products Owned by the customer:(Please tick in the appropriate box.)

☐ Washing Machine ☐ Refrigerator ☐ Color TV ☐ 100% Clothes Dryer ☐ Dishwasher

☐ Music System ☐ Oven Toaster Grill ☐ 2 Wheeler ☐ Car ☐ Air Conditioner

IFB Industries Limited

Regd. Off : 14 Taratolla Road, Kolkata - 700088

WARRANTY

IFB Industries Ltd. ("The Company") warrants to the original domestic purchaser of this dishwasher ("Appliance") that it is free from defects in workmanship and materials. During 24 months from the date of purchase of the new dishwasher all the parts of the dishwasher which prove to be defective in workmanship and/or materials shall be replaced or repaired free of charge on intimation to the company/ company's authorized service centre nearest to the place where the appliance is installed. This warranty is subject to limitations of warranty.

LIMITATIONS OF WARRANTY

1. This warranty is not valid in case of the following events:
   a) If the warranty card is not fully and properly filled in and signed at the time of purchase/ installation by the company's authorized dealer / service engineer.
   b) If the completed warranty card is not presented to the authorized personnel at the time of service / repair.
   c) If the appliance is not used in accordance with manufacturer's instructions given in the **"Operating Manual".**
   d) If the dishwasher has been installed, serviced, repaired, opened or tampered by any unauthorized personnel.
   e) If defects arise/caused by accidents, alteration, misuse, neglect, abuse, substitution of original components with spurious/non genuine components, attacked by household pest /rodents,fire, flood, earthquake, lightning and/or any other acts of God/natural, calamities.
   f) If defects arising with optional accessories like trolleys, rat mesh, machine cover, on-line filter, inlet /exhaust extension hoses, tap adapter, extended power supply cable, adjustment feet cover, etc. thereof.
   g) If damages occur by improper electrical circuits outside the dishwasher or by any electrical supply thereof.
   h) If the machine serial number on the appliance is defaced, missing or altered.
   i) If sea water or any substandard detergent has been used in the appliance.
   j) If the appliance is taken out of India.
2. This warranty does not cover any type of painting, plating including rusting etc.,or defects thereof.
3. The company is not liable for any incidental or consequential damages.
4. Parts replaced or repaired under this warranty are warranted throughout the remaining of the original warranty period.
5. The company is not liable for any delay in servicing due to reasons beyond the control of the company or any of its authorized service centre.
6. This warranty is not applicable, if the dishwasher is used for commercial purpose or at places like institutions, hostels, hospitals, community halls and other similar applications.

7. For any service under this warranty beyond city/town/municipal limits from the company /authorized service centre, a fixed charge of Rs. 250/- will be collected from the customers in addition to the actual to and fro charges by the shortest route. Alternatively, the customer can bring the appliance to the nearest service centre for carrying out the necessary repairs, at customer's own cost.
8. During the warranty period, whenever the appliance is shifted from the original city of purchase to another city / town where service is provided by the company's authorized service agent, a warranty transfer charge of Rs. 300/- will be collected from the customer by the company's authorized service agent. The above charges also include the reinstallation charges of the appliance. However, in case of transfer to a city where the company provides direct service, a nominal charge of Rs. 250/- only will be collected from the customer towards reinstallation. The Company, however, shall not undertake the responsibility of shifting / transfering the appliance from the location where the appliance is originally installed.
9. This warranty is issued subject to the jurisdiction of Calcutta courts. and /or other judicial / quasi judicial forums having jurisdiction over the registered office of the company.
10. This is the ONLY WARRANTY covering the appliance given by the company.

OVER **7 MILLION** SATISFIED CUSTOMERS

Microwave Oven | Built in Oven | Dishwasher | Chimney I Built in Hob | Top Load | Front Load | 100% Clothes Dryer | Air Conditioner

Shop 24x7 @ www.ifbappliances.com | Email customerservice@ifbglobal.com | 080458 45678 Our lines remain open 24/7

www.facebook.com/IFBappliances twitter.com/IFBAppliances www.instagram.com/ifbappliances/

www.youtube.com/channel/UCJTIHxPTfez4mrbVBIQLb9Q

10794755